SPECIFICATIONS	
APPLICATION	6–WIRE DC & GENERAL PURPOSE
CONTACT MATERIAL/PLATING	CuZn, GOLD PLATED
COUPLING METHOD	POM (POLYOXYMETHYLENE) SNAP LOCK
RATED CURRENT	1 A
RATED VOLTAGE	24V dc
CABLE TYPE	UL AND CSA APPROVED, AWM STYLE 2517
OUTER JACKET MATERIAL/COLOR	OIL RESISTANT, FLAME RETARDANT PVC YELLOW OR BLACK
CONDUCTOR INSULATION MATERIAL	PVC
SEPARATOR MATERIAL	POWDER, LIQUID OR TISSUE, MACHINE STRIPPABLE
# CONDUCTORS (AWG)	6 X 26 AWG (MIN), AWM STYLE 1731
TEMPERATURE RATING	–40°C TO +90°C
PROTECTION CLASS	MEETS NEMA 1, 3, 4, 6P, AND IEC IP67
LABEL INFORMATION [PRODUCT]	MODEL NO., PART NO., DATE CODE, BAR CODE, BANNER LOGO, WEB ADDRESS
LABEL INFORMATION [BAG]	MODEL NO., PART NO., DATE CODE, BAR CODE, BANNER LOGO, WEB ADDRESS, STREET ADDRESS AND PHONE NUMBER
LABEL LOCATION [PRODUCT]	100 – 200mm FROM CONNECTOR END
CABLE COIL DIAMETER	100 – 200mm, USE 2 BANDS, BINDERS OR EQUIVALENT

REVISION HISTORY

REV	DESCRIPTION	DATE	APPROVED
A	1.26" (32,0mm) WAS 1.11" (28,2mm); CHANGES TO TABLE;	4–26–00	M.PEDLEY E.SCHWAB
B	CHANGED TO METRIC DIM'S ONLY; CHANGES TO TABLE;	6–8–00	M.PEDLEY E.SCHWAB
C	ADDED P/N 71429;	5–14–03	J.RENGEL G.SCHRAUT
D	ECO 312412; AWM STYLE WAS 1731;	7–14–14	J.RENGEL G.SCHRAUT
E	ECO 114335; CONNECTOR DIAMETER WAS ø10.2 ± .5; CONNECTOR LENGTH WAS 32 ± .5;	7–28–17	J.BREEZEE A.OLSON

P/N	MODEL NO.	LENGTH 'L' +5% / –0
62985	PKG6Z–2	2 METERS
62986	PKG6Z–9	9 METERS
71429	PKG6Z–.5	.5 METERS

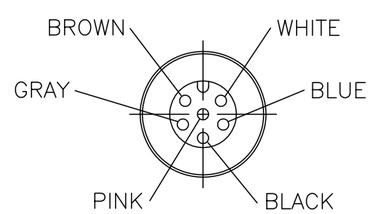

FEMALE PIN–OUT

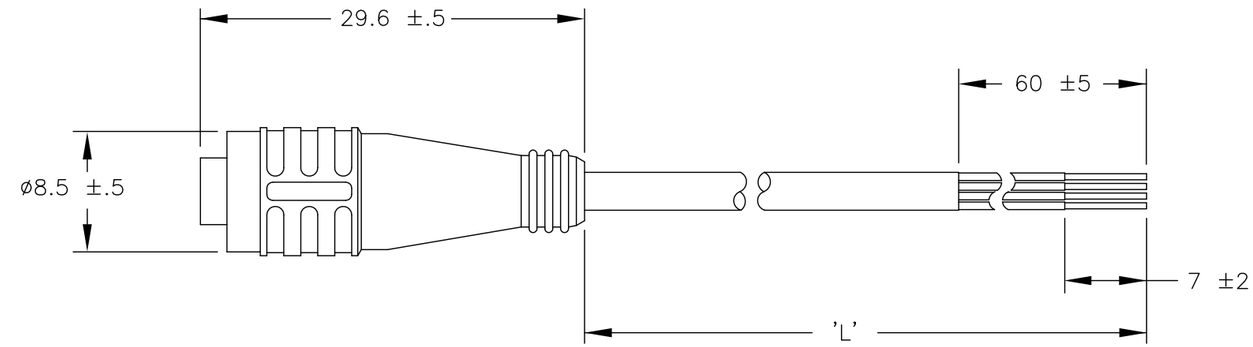

NOTE:

1. SLUGS TO REMAIN ON WIRES. IF REMOVED, WIRES MUST BE TINNED.

DIMENSIONS ARE IN MILLIMETERS UNLESS OTHERWISE SPECIFIED
TOLERANCE ON ANGLE ±3°
X. ±.5
.X ±.1
INTERPRET DIM AND TOL PER ASME Y14.5M – 1994

THIRD ANGLE PROJECTION

This drawing is the property of BANNER ENGINEERING CORP. and is proprietary in general and in detail. Its contents shall not be revealed to outside parties without written consent of BANNER.

DWN.	M. PEDLEY	DATE 3–30–00
ENG.	E. SCHWAB	DATE 4–5–00
		DATE

ALL SHEETS ARE THE SAME REVISION STATUS

BANNER ENGINEERING CORP.
P.O. BOX 9414
MINNEAPOLIS, MN 55440

TITLE
CORDSET;
PICOFAST QD, 6–WIRE MODEL PKG

SIZE	DWG NO	REV
B	62985	E
SCALE 2:1	SHEET 1 OF 1	

AUTOCAD