Part Number	Length (Meters)
CA0161B22301012	1 (3.28 FEET)
CA0161B22302012	2 (6.56 FEET)
CA0161B22303012	3 (9.84 FEET)
CA0161B22305012	5 (16.40 FEET)
CA0161B22307012	7 (22.96 FEET)
CA0161B22310012	10 (32.80 FEET)
CA0161B22313012	13 (42.65 FEET)
CA0161B22615012	15 (49.21 FEET)

REVISIONS							
REV	ZONE	ECO	DESCRIPTION	DATE	BY	CHK	APPR
A1	-	-	TECHNICAL DATA SHEET RELEASE	14-JULY-2017	RO	-	–

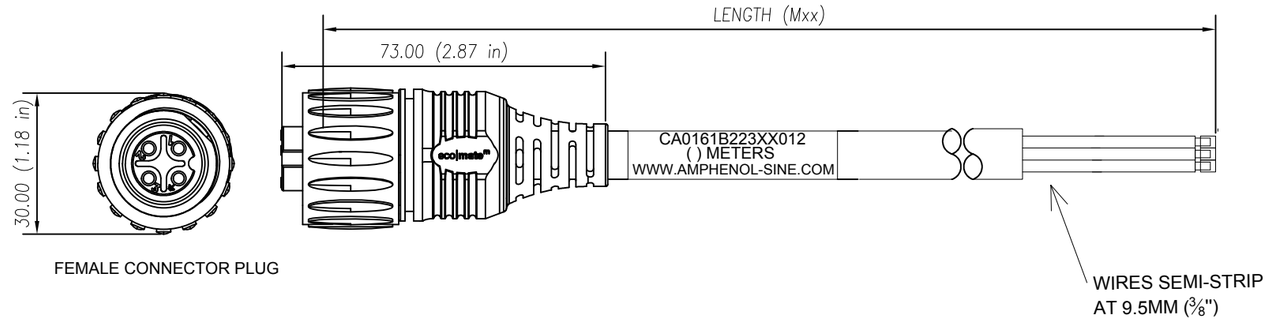

FEMALE CONNECTOR PLUG

WIRING DIAGRAM

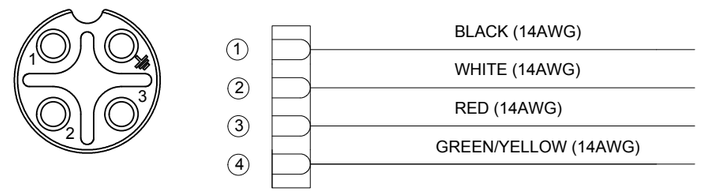

FACE VIEW

TECHNICAL DATA:

1) MATERIALS:
   - COUPLING NUT: NYLON PA 6.6
   - INSULATION INSERT: NYLON PA 6.6, UL 94/V-0
   - CONTACT: SILVER PLATED
   - OVERMOLD MATERIAL: THERMOPLASTIC COLOR: BLACK
   - CABLE RATING: UL LISTED: TC-ER PER UL 1277, MTW PER UL 1063, WTTC PER UL 2277, SUMERSIBLE PUMP ATTRIBUTES LISTED: UL OIL RES I/II, 75°C WET; 90°C DRY, SUNLIGHT RESISTANT, DIRECT BURIAL, NFPA 79 2015
   - CABLE JACKET MATERIAL: PVC COLOR: BLACK
   - CONDUCTOR INSULATION: PVC
   - NUMBER OF CONDUCTORS: (4) 14AWG
   - GASKET MATERIAL: NEOPREN
2) ELECTRICAL DATA:
   - CURRENT (MAX): 16A
   - VOLTAGE (MAX): 400V AC/DC
   - INSULATION RESISTANCE (MIN): 5000M OHMS
   - DIELECTRIC TEST VOLTAGE: 2200V
3) MECHANICAL DATA:
   - TEMPERATURE RANGE: -40°C TO +100°C
   - PROTECTION: IP68 (MATED CONDITION)
   - MATING CYCLES: >500
4) RoHS COMPLIANT

Risk of Electrical Shock
Do Not Disconnect Under Load.
Risque de chocs electriques
Ne pas debrancher sous tension.
WARNING

TOLERANCE	
0-2.99 M = +100.0/-25.0mm	0-9.99 FT = +4" / -1"
3-8.99 M = +150.0/-25.0mm	10.00-29.99 FT = +6" / -1"
9-14.99 M = +300.0/-25.0mm	30.00-49.99 FT = +12" / -1"
15-OVER M = +450.0/-25.0mm	50 FT-OVER = +18" / -1"

QUANTITY	PART NUMBER	DESCRIPTION	ITEM

MATERIALS LIST

UNLESS OTHERWISE SPECIFIED
1) All dimensions are in metric(mm).
2) Tolerances are as follows:
1 PL DEC ±0.30
2 PL DEC ±0.15
3 PL DEC ±0.08
Fractions ±1/64
Angles ±1°
3) Note reference = X

MATERIAL SPECIFICATIONS:

PROCESS SPECIFICATIONS:

NEXT ASSY:

SIGNATURES		DATE
DRAWN:	KMM	12-MAY-14
CHECKED:	MRF	12-MAY-14
ENGINEER:	KMM	
APPROVAL:	RFC	12-MAY-14
CUSTOMER:		

THIS DRAWING IS SUPPLIED FOR INFORMATION ONLY. DESIGN FEATURES, SPECIFICATIONS AND PERFORMANCE DATA SHOWN HEREON ARE THE PROPERTY OF THE AMPHENOL CORPORATION. NO RIGHTS OF REPRODUCTION ARE IMPLIED. ALL DIMENSIONS ARE SUBJECT TO NORMAL MANUFACTURING VARIATIONS.

Amphenol

Sine Systems - www.sineco.com
44724 Morley Drive
Clinton Township, MI 48036

Ecomate 4 Pos Circular Molded, Std. Strain relief, Female to leads, 14AWG

SIZE	TYPE	DWG NO:	REVISION
	C-	CA0161B223XX012	A1

SCALE: HALF | CA0161B223XX012 | SHEET 1 OF 1

TITLE: M8, 3PIN,4P-SHV-SHV, MENDS
DWG NO: M12SHV4MXX
REV: C1
SHT: 1
OF: 1