REV.	ECN NO.	DATE	SIGN	DESCRIPTION
C1	NA	2022/05/29	XU	First Version
C2	NA	2022/07/18	XU	Change The Length To 1000mm

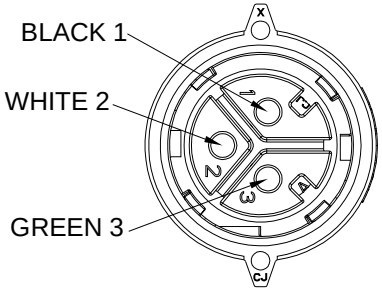

VIEW A

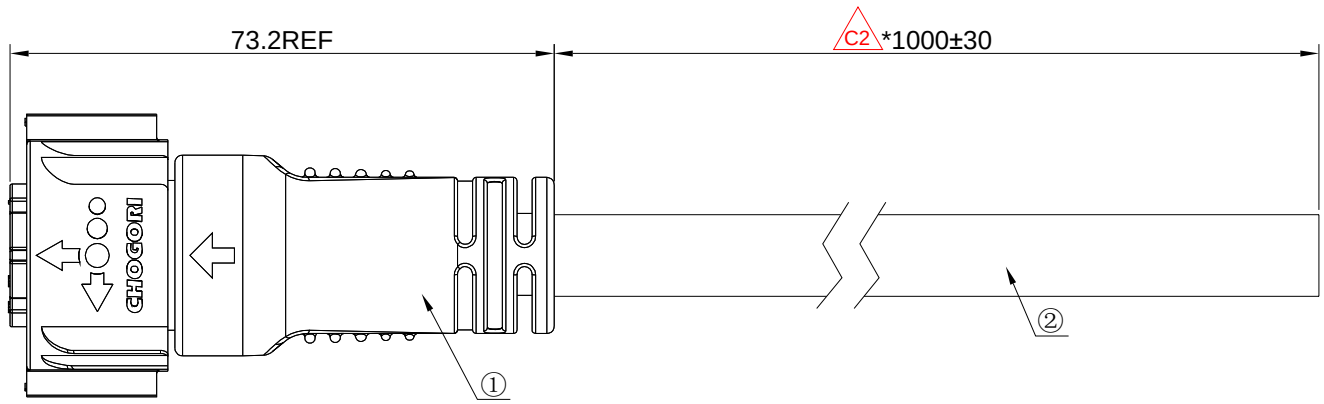

P/N：24003233-01-001

SPECIFICATIONS:
1.INSULATION RESISTANCE：10MΩ@500VDC/0.01S.
2.VOLTAGE RATING：300V.
3.CURRENT RATING：35A.
4.OPERATION TEMPERATURE：-10℃~+105℃.
5.WATERPROOF IPX7(MATED).
6.RoHS COMPLIANT.

No.	Material No.	Q'ty	Unit	Material Description
2	900-00301-00037	A/R	M	SJTW 3*12AWG PVC 105℃ 300V BLACK OD11.0
1	24003233-01-001	1	PC	LARGE SERIES 3PIN MALE CONNECTOR WITH FEMALE PIN(4 LOCKS,MOLDING,-501)

Material List

UNIT:mm

未注线性和角度尺寸公差
UNSPECIFIED TOLERANCE
GB/T 1804-M

TITLE: LARGE SERIES 3PIN MALE CONNECTOR WITH FEMALE PIN(4 LOCKS,MOLDING,-501) L=1000MM

SCALE: N/A | SHEET: 1 of 1 | REV.: C2 | SIZE: A4 | * Inspection Item

CHOGORI®
Chogori Technology Co., Ltd

ITEM NO. 1IC03622051502	DRAWN BY XU	DATE 2022/06/24	
DWG NO. 1IC03622051502	CHECKED BY Kevin 2022.08.05 14:03:59 +08'00'	DATE	
CUSTOMER NO.	REV.	APPROVED BY EriC	DATE 2022.08.05 15:21:01 +08'00'

THIS INFORMATION IS CONFIDENTIAL AND IS DISCLOSED TO YOU ON CONDITION THAT NO FURTHER DISCLOSURE IS MADE BY YOU TO OTHER THAN CHOGORI PERSONNEL WITHOUT AUTHORIZATION FROM CHOGORI CORP.