REV.	ECN NO.	DATE	SIGN	DESCRIPTION
C1	NA	2022/05/28	XU	First Version
C2	NA	2022/06/24	XU	Change The Length To 1000mm

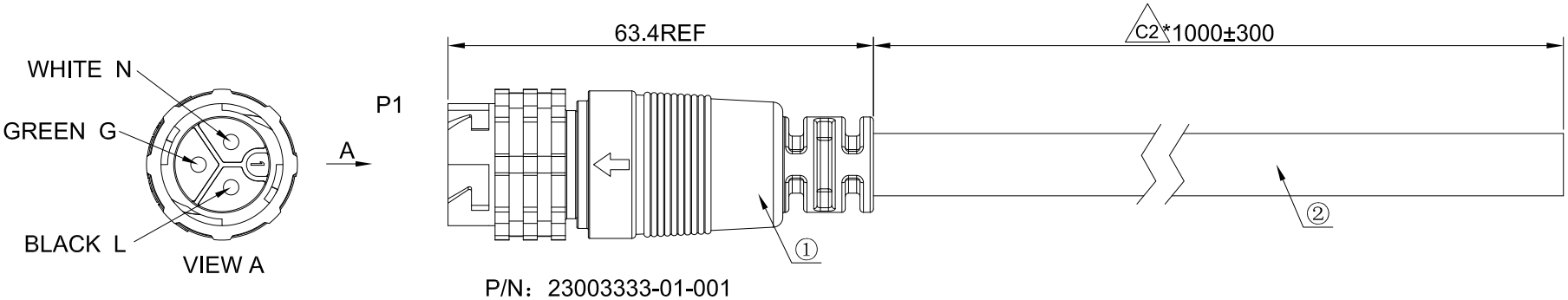

SPECIFICATIONS:
1.INSULATION RESISTANCE：10MΩ@500VDC/0.01S.
2.VOLTAGE RATING：600V.
3.CURRENT RATING：10A.
4.OPERATION TEMPERATURE：-10℃~+105℃.
5.WATERPROOF IPX7(MATED).
6.RoHS COMPLIANT.

No.	Material No.	Q'ty	Unit	Material Description
2	900-00301-00118	A/R	M	STW 3*18AWG PVC 105℃ 600V BLACK OD9.3
1	23003333-01-001	1	PC	MIDDIE SERIES 3PIN FEMALE CONNECTOR WITH MALE PIN(4 LOCKS,MOLDING,-511)

Material List

UNIT:mm	TITLE: MIDDIE SERIES 3PIN FEMALE CONNECTOR WITH MALE PIN(4 LOCKS,MOLDING,-511) L=1000MM	CHOGORI® Chogori Technology Co., Ltd	ITEM NO. 1IC03622051406 / DRAWN BY XU / DATE 2022/06/24
未注线性和角度尺寸公差 UNSPECIFIED TOLERANCE	SCALE N/A / SHEET 1 of 1		DWG NO. 1IC03622051406 / CHECKED BY Kevin 2022.06.25 10:17:39 +08'00' / DATE
GB/T 1804-M	REV. C2 / SIZE A4 / * Inspection Item		CUSTOMER NO. / REV. / APPROVED BY / DATE

THIS INFORMATION IS CONFIDENTIAL AND IS DISCLOSED TO YOU ON CONDITION THAT NO FURTHER DISCLOSURE IS MADE BY YOU TO OTHER THAN CHOGORI PERSONNEL WITHOUT AUTHORIZATION FROM CHOGORI CORP.