THIS DRAWING IS UNPUBLISHED. RELEASED FOR PUBLICATION -,- .
© COPYRIGHT - By - ALL RIGHTS RESERVED.

REVISIONS

P	LTR	DESCRIPTION	DATE	DWN	APVD
	G	ECR-16-013297	24JUL2017	FL	SY

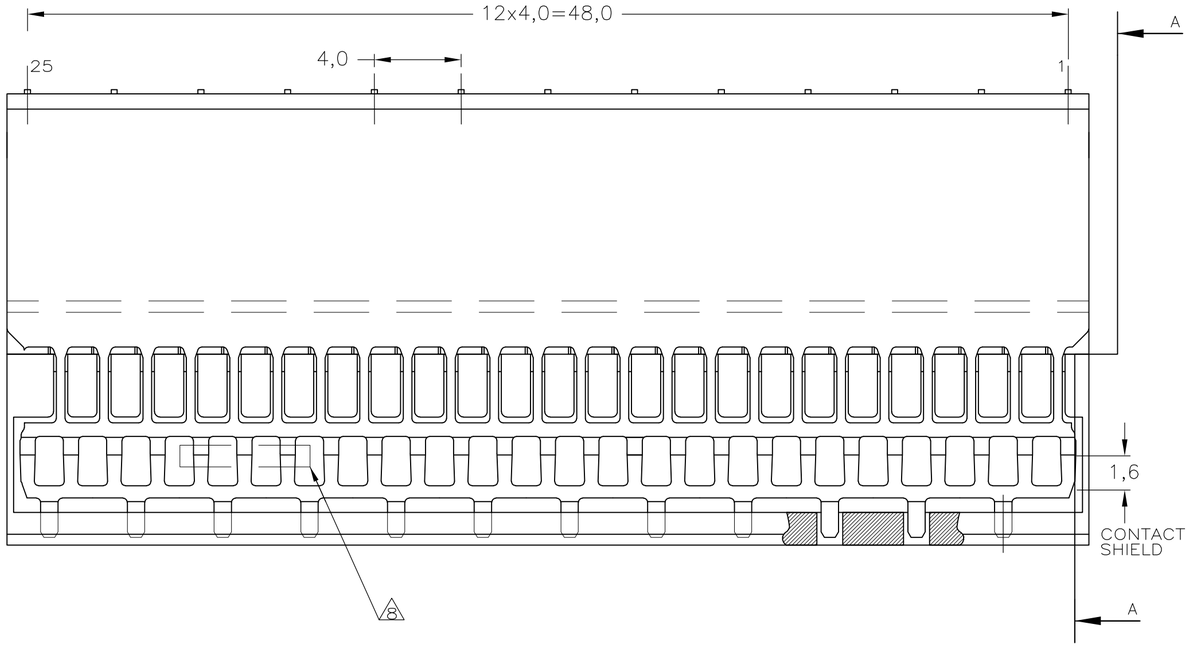

SECTION A–A

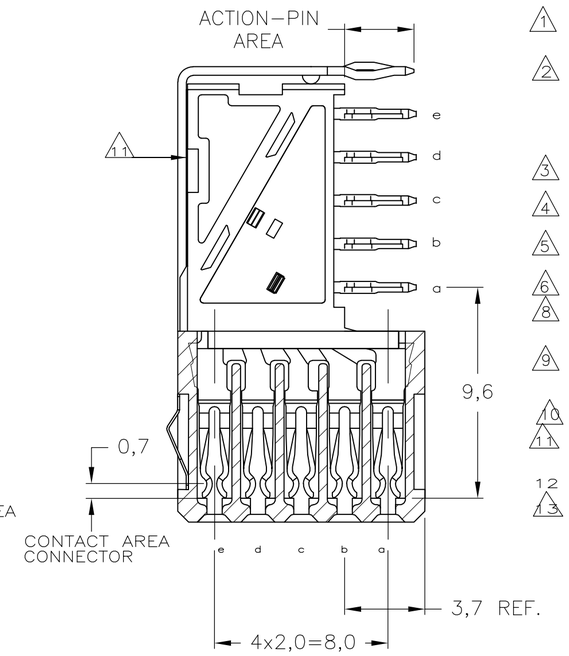

NOTES:

1. MATERIAL CONTACTS; PHOSPHORBRONZE
MATERIAL HOUSING; GLASSFILLED POLYESTER (GRAY)
2. GENERAL PLATING SPECIFICATION: UNDERPLATING (ENTIRE CONTACT): 1,27µm NICKEL MIN.
AND ACTION PIN: 0,5µm TIN MIN.
FOR PLATING OF MATING SURFACES SEE APPLICABLE SPECIFICATION REFERENCE FOR EACH DASH NUMBER.
3. CONFORMS TO ALL TESTING ACCORDING IEC 61076–4–101 PERFORMANCE LEVEL 2.
4. CONFORMS TO ALL TESTING ACCORDING IEC 61076–4–101 PERFORMANCE LEVEL 1.
5. CONNECTOR TESTED AND QUALIFIED AGAINST TELCORDIA GR–1217–CORE QUALITY LEVEL III, CENTRAL OFFICE APPLICATIONS.
6. CONNECTOR LUBRICATED WITH TELCORDIA APPROVED LUBRICANT.
8. ASSEMBLY PRINTED WITH P/N AND DATECODE
THE MARKING CAN APPEAR ON THE FRONT SIDE OR BACK SIDE.
9. HOLE PATTERN FOR FEMALE CONNECTOR TYPE B
125 PLATED–THROUGH HOLES AT 2x2mm SQUARE GRID
10. ROW "f" 13 PLATED THROUGH HOLES FOR UPPERSHIELD
11. SHIELD MOUNTED ON CONNECTOR WITH DOUBLE SIDED ADHESIVE TAPE OR ADHESIVE
12. BASIC P.N. LOWERSHIELD: 5338110
13. 0.76µm MIN GOLD PLATING AT MATING SURFACE.

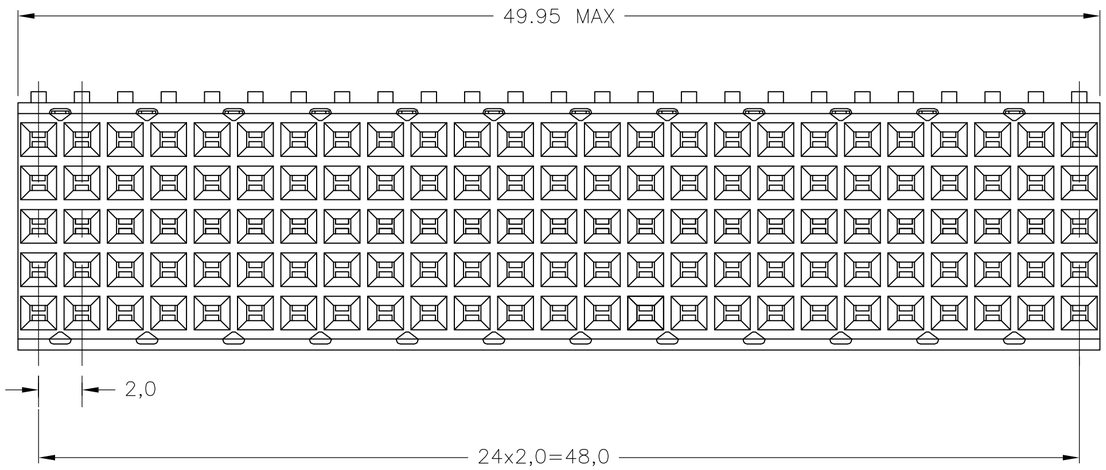

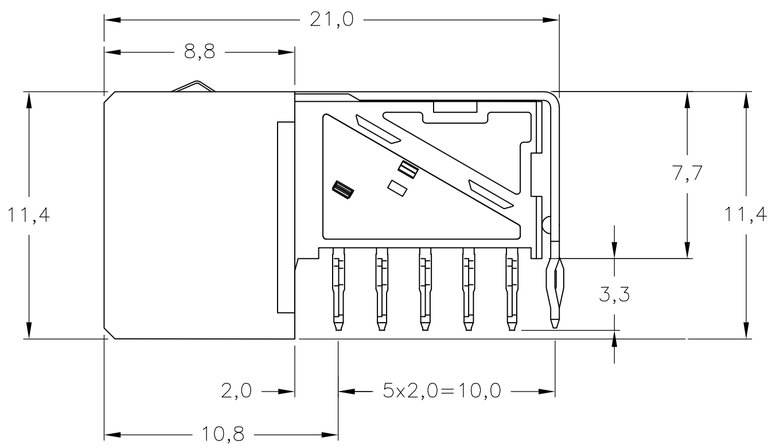

COMPONENT SIDE AS SHOWN
RECOMMENDED PCB–HOLE LAY–OUT
SCALE 2,5:1

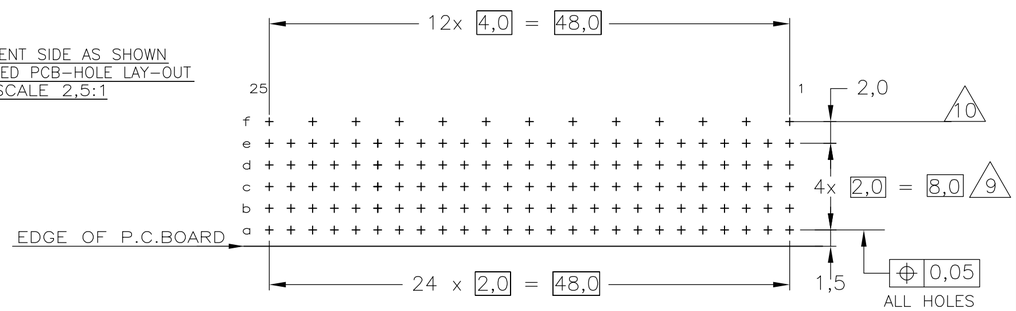

P.C.B. HOLE DIM. ACTION PIN
FOR DETAILS SEE
APPLICATION SPECIFICATION

	2 3 7 13	1	3–5352069–0
	2 5 6 7	1	5352069–9
OBSOLETE	2 4 7	1	5352069–4
	2 3 7	1	5352069–1
	FINISH	MATERIAL	PARTNUMBER

THIS DRAWING IS A CONTROLLED DOCUMENT.

DIMENSIONS: mm

TOLERANCES UNLESS OTHERWISE SPECIFIED:
0 PLC ± –
1 PLC ± –
2 PLC ± – ±0.2
3 PLC ± –
4 PLC ± –
ANGLES ± –

MATERIAL –
FINISH –

DWN K.N.KIRAN 17AUG2004
CHK B.MOOIJ 24SEP2004
APVD B.MOOIJ 24SEP2004
PRODUCT SPEC 108–19082
APPLICATION SPEC 114–19029
WEIGHT 0.000000

TE Connectivity

NAME
Z–PACK 2mm HM
TYPE B – 25 COLUMNS
PRE–SHIELDED RECEPTACLE

SIZE A2 | CAGE CODE 00779 | DRAWING NO C–5352069 | RESTRICTED TO –

CUSTOMER DRAWING | SCALE 5:1 | SHEET 1 OF 1 | REV G

5352069

1471–9 (1/15)