THIS DRAWING IS UNPUBLISHED. RELEASED FOR PUBLICATION -,- .
© COPYRIGHT - BY TYCO ELECTRONICS CORPORATION. ALL RIGHTS RESERVED.

LOC	DIST
AD	00

REVISIONS

P	LTR	DESCRIPTION	DATE	DWN	APVD
	B	ECR-10-018652	10SEP10	JS	MQW
	C	ECO-11-024491	13DEC11	SY	MQW
	D	ECR-12-007088	17APR12	SY	AC

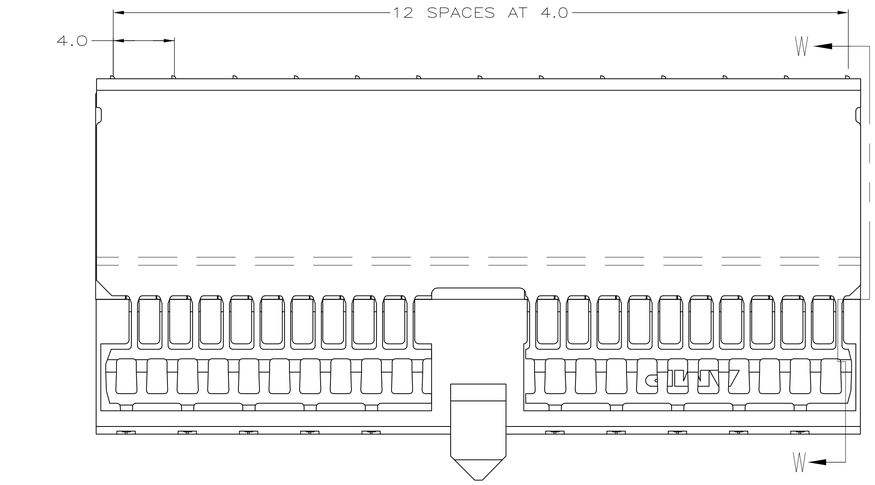

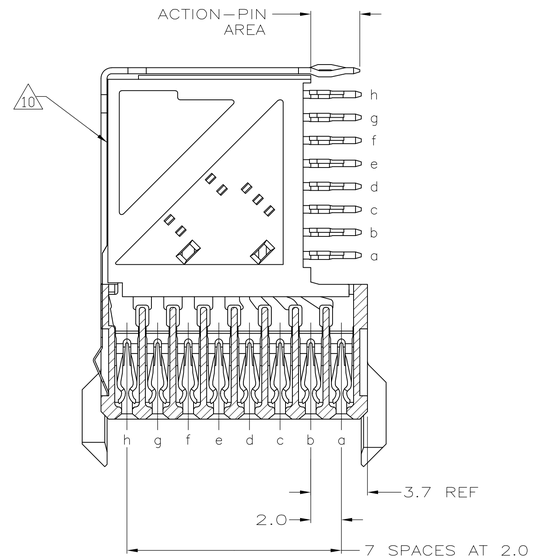

SECTION W-W

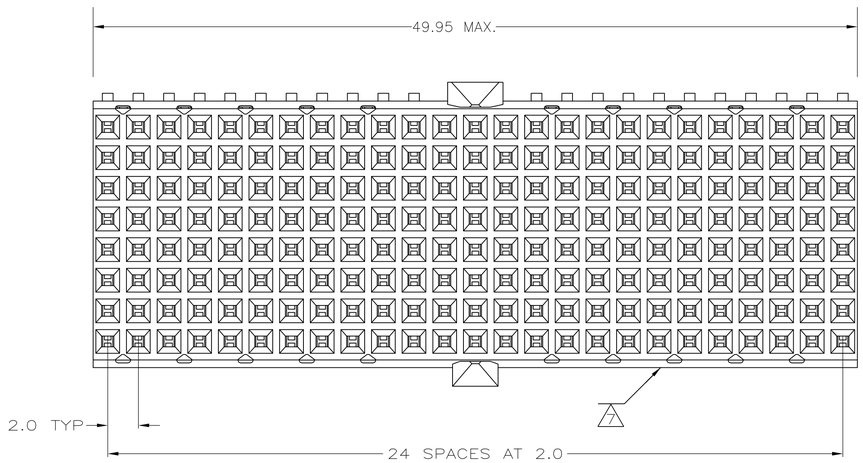

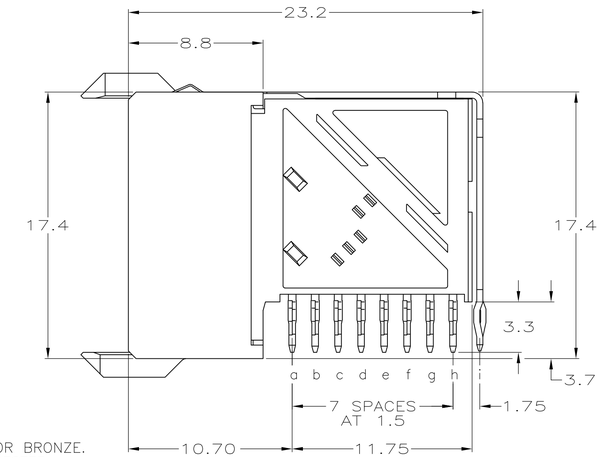

1. MATERIAL:
   CONTACT & SHIELD: PHOSPHOR BRONZE.
   HOUSING: GLASS-FILLED POLYESTER.
2. GENERAL PLATING SPECIFICATION: UNDERPLATING (ENTIRE CONTACT): 1.27µm MIN NICKEL AND ACTION PIN: 0.5µm MIN TIN.
   FOR PLATING OF MATING SURFACES SEE APPLICABLE SPECIFICATION REFERENCE FOR EACH DASH NUMBER.
3. CONFORMS TO ALL TESTING ACCORDING TO IEC 61076-4-101 PERFORMANCE LEVEL 2.
4. CONFORMS TO ALL TESTING ACCORDING TO IEC 61076-4-101 PERFORMANCE LEVEL 1.
5. CONNECTOR TESTED AND QUALIFIED AGAINST TELCORDIA GR-1217-CORE QUALITY LEVEL 3, CENTRAL OFFICE APPLICATIONS.
6. CONNECTOR TESTED AND QUALIFIED AGAINST TELCORDIA GR-1217-CORE QUALITY LEVEL 3, UNCONTROLLED ENVIROMENT APPLICATIONS.
7. CONNECTOR MARKED WITH PART NUMBER AND DATE CODE. ADDITIONAL CHARACTERS OR MARKINGS, AS WELL AS THE LOCATION OF THE MARKINGS, MAY BE ADDED FOR TRACEABILITY BASED UPON MANUFACTURERS DISCRETION.
8. PLATED-THROUGH HOLES AT 2 x 1.5mm GRID. 213 TOTAL HOLES.
9. ROW "i" 13 PLATED THROUGH HOLES FOR UPPERSHIELD.
10. SHIELD MOUNTED ON CONNECTOR WITH DOUBLE SIDED ADHESIVE TAPE OR ADHESIVE.
11. CONNECTOR LUBRICATED WITH BELCORE APPROVED LUBRICANT, TECHNICAL REFERENCE: TR-NWT-001217 ISSUE 1, SEP 1992.
12. OBSOLETE PARTS: OBSOLETE CIS STREAMLINING PER D.RENAUD/D.SINISI

PLATED THRU HOLES PARAMETERS

REFERENCE APPLICATION SPECIFICATION

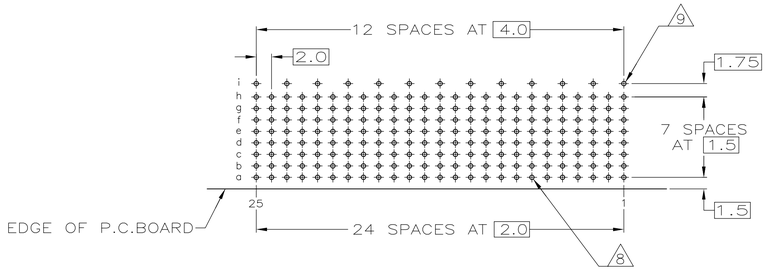

RECOMMENDED PCB HOLE LAYOUT
COMPONENT SIDE
SCALE 2.5:1

2 6 11	~~1-5646759-9~~
2 5 11	5646759-9
2 4	~~5646759-4~~
2 3	5646759-1
FINISH	PART NUMBER

THIS DRAWING IS A CONTROLLED DOCUMENT.

DIMENSIONS: mm

TOLERANCES UNLESS OTHERWISE SPECIFIED:
0 PLC ± —
1 PLC ± 0.1
2 PLC ± 0.05 ±0.2
3 PLC ± —
4 PLC ± —
ANGLES ± —

MATERIAL: 1

FINISH: SEE TABLE

DWN B.CARBO 04AUG05
CHK G.SKIPPER 04AUG05
APVD G.SKIPPER 04AUG05
PRODUCT SPEC 108-1622
APPLICATION SPEC 114-19029
WEIGHT —

Tyco Electronics
Tyco Electronics Corporation
Harrisburg, PA 17105-3608

NAME: RECEPTACLE ASSEMBLY, Z-PACK 2mm HM, TYPE D/E WITH GROUND RETURN SHIELD

SIZE	CAGE CODE	DRAWING NO	RESTRICTED TO
A1	00779	C-5646759	—

CUSTOMER DRAWING | SCALE 5:1 | SHEET 1 OF 1 | REV D