THIS DRAWING IS UNPUBLISHED. RELEASED FOR PUBLICATION -,- .
© COPYRIGHT - By - ALL RIGHTS RESERVED.

LOC	DIST
GP	00

REVISIONS

P	LTR	DESCRIPTION	DATE	DWN	APVD
	A	ORIGINAL	05NOV2012	CJV	DPO

*ACTION PIN AND AMPOWER are registered trademarks of AMP Incorporated.

1. HOLE DIAMETER AFTER PLATING.
2. FOR 2.36 [.093] AND THICKER PCB'S.
3. HOUSING MATERIAL: POLYESTER
   CONTACT MATERIAL: COPPER ALLOY
4. CONTACT FINISH: SILVER ON MATING END, TIN ON SOLDER TAILS, NICKEL ALL OVER.

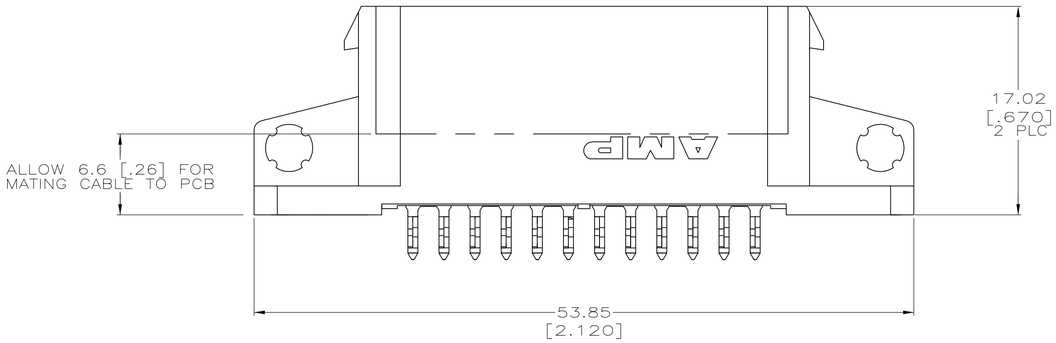

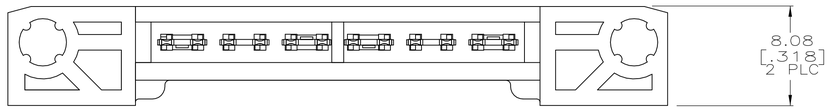

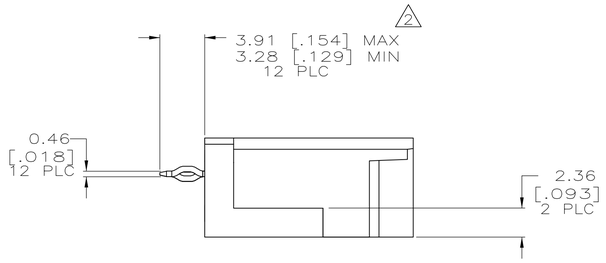

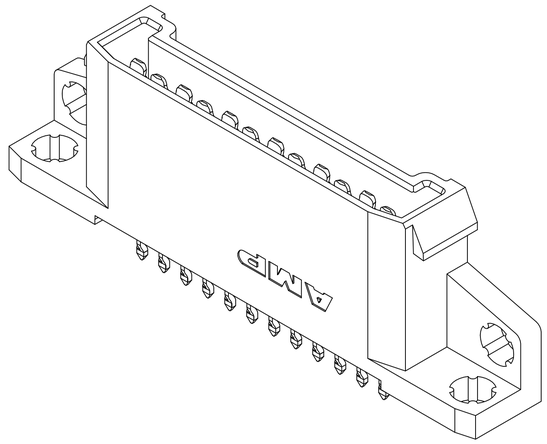

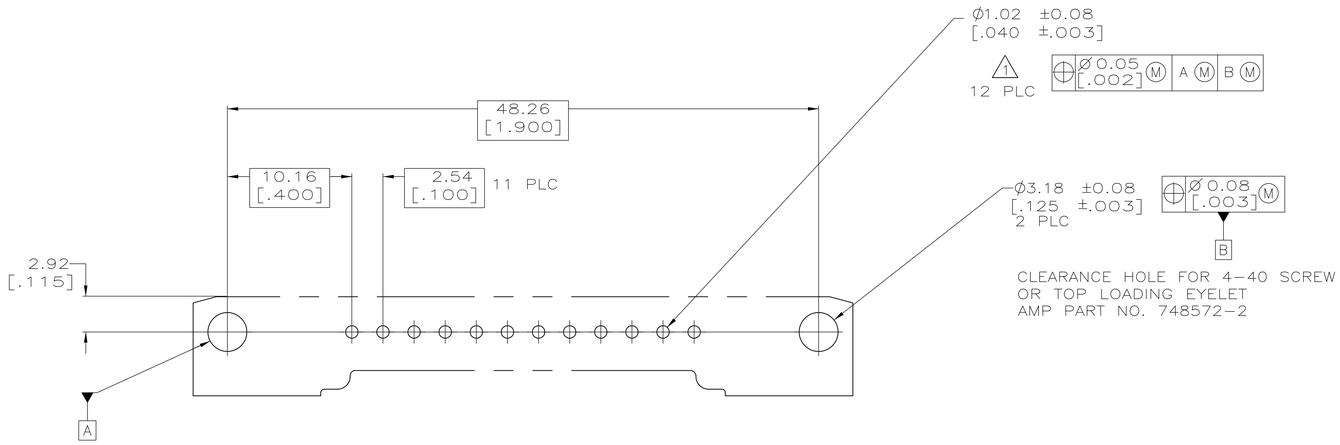

RECOMMENDED PC BOARD LAYOUT
2.54 [.100] CENTERLINES

5765271-1
PART NUMBER

THIS DRAWING IS A CONTROLLED DOCUMENT.
DIMENSIONING AND TOLERANCING PER ASME Y14.5M-2009

DIMENSIONS: mm [INCHES]

TOLERANCES UNLESS OTHERWISE SPECIFIED:
0 PLC ± -
1 PLC ± -
2 PLC ± 0.25 [.01]
3 PLC ± 0.13 [.005]
4 PLC ± -
ANGLES ± -

MATERIAL 3
FINISH 4

DWN C. VALENTINE 05NOV2012
CHK D. ORRIS 05NOV2012
APVD D. ORRIS 05NOV2012
PRODUCT SPEC 108-1410
APPLICATION SPEC 114-49005
WEIGHT -

TE Connectivity

NAME
AMPOWER Wave Crimp System
ACTION PIN HDR ASSY, VERT
2.54 CENTERLINES

SIZE	CAGE CODE	DRAWING NO	RESTRICTED TO
A1	00779	C-5765271	-

CUSTOMER DRAWING
SCALE 4:1 SHEET 1 OF 1 REV A

4805 (3/11)