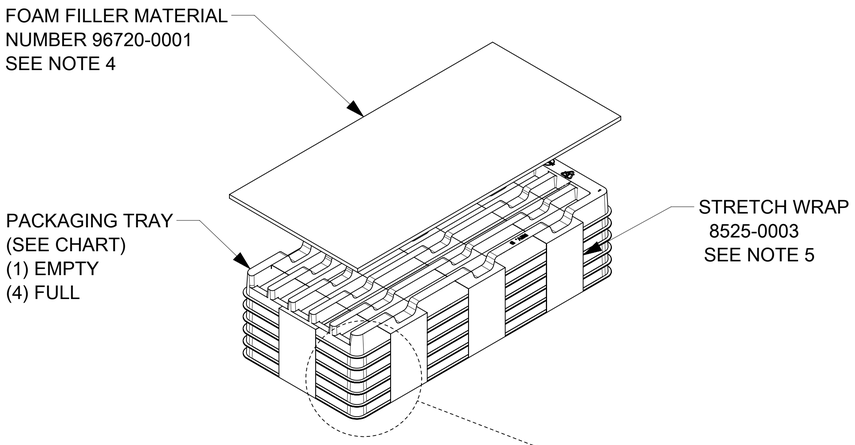

NOTES:

1. PARTS TO BE ORIENTED IN PACKAGING TRAYS AS SHOWN.
2. REFER TO CHART FOR PACKAGING TRAY MATERIAL NUMBER.
3. 96707-1003 OR 96707-0003 PRIMARY SHIPPING CARTON TO BE SEALED WITH 2.0 INCH WIDE TAPE.
4. USE FOAM FILLER AS REQUIRED TO TAKE UP EXCESS SPACE INSIDE CARTON.
5. STRETCH WRAP SHOULD BE USED IN THE AREAS SHOWN. WRAP STACK WITH A MINIMUM OF 3-5 WRAPS.

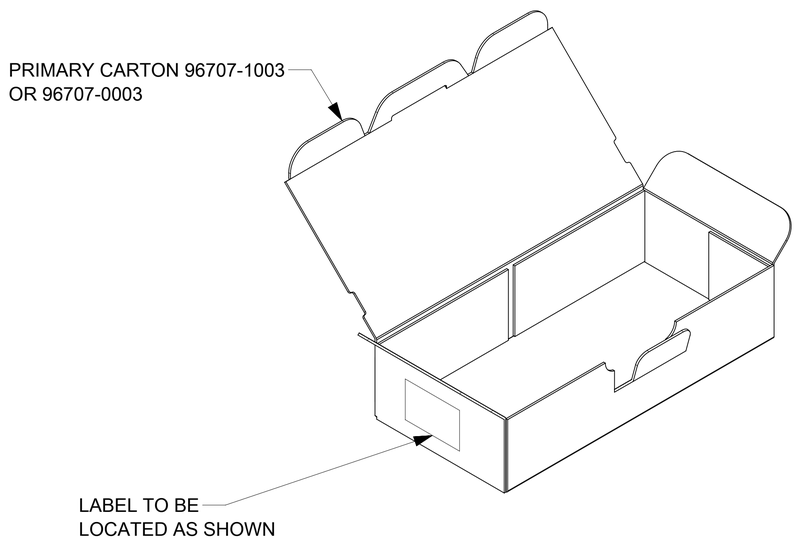

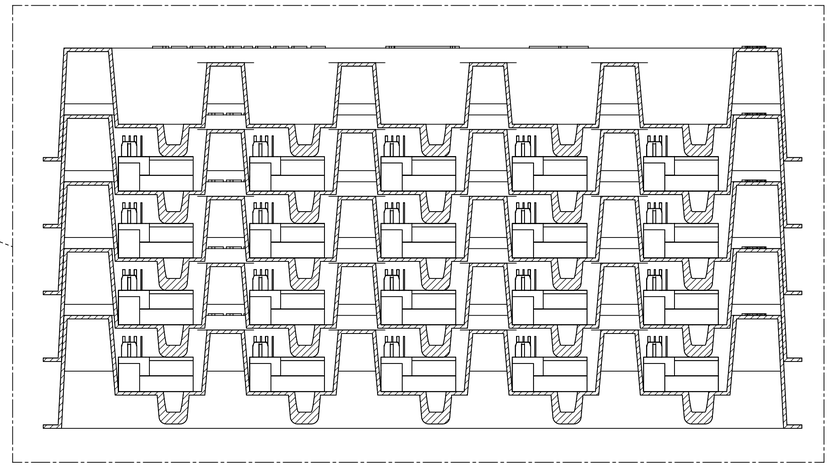

PART ORIENTATION IN TRAY

DOCUMENT STATUS	P1	RELEASE DATE	2022/08/18 11:53:44

FUNCTIONAL SYMBOLS	THIS DRAWING CONTAINS INFORMATION THAT IS PROPRIETARY TO MOLEX ELECTRONIC TECHNOLOGIES, LLC AND SHOULD NOT BE USED WITHOUT WRITTEN PERMISSION			
FA = 0	DIMENSION UNITS: mm	SCALE: 1:1	CURRENT REV DESC:	molex
FC = 0	GENERAL TOLERANCES (UNLESS SPECIFIED)			PACKAGING SPECIFICATION LOW PROFILE HYBRID 45984 & 45985 SERIES
FP = 0	4 PLACES ±	MM ±	EC NO: 716205	
DIVISIONAL SYMBOLS	3 PLACES ±	INCH ±	DRWN: CHETAB 2022/07/21	PACKAGING DESIGN DRAWING
	2 PLACES ± 0.13	±	CHK'D: MBELLE 2022/08/10	
	1 PLACE ± 0.25	±	APPR: HTHYAGARAJ 2022/08/18	
	0 PLACES ±	±	INITIAL REVISION:	DOCUMENT NUMBER: PK-45984-001 / DOC TYPE: PDD / DOC PART: 001 / REVISION: N2
	ANGULAR TOL ± 0.5 °		DRWN: BANDURA 2006/04/19	
	DRAFT WHERE APPLICABLE MUST REMAIN WITHIN DIMENSIONS		APPR: APATEL 2006/05/18	
	THIRD ANGLE PROJECTION	DRAWING: A1-SIZE	SERIES: 45984	MATERIAL NUMBER: SEE TABLE / CUSTOMER: GENERAL MARKET / SHEET NUMBER: 1 OF 4

FORMAT: Not applicable to prod.#
DATE: 2006/05/18
DATE: 2006/05/14

STANDARD RECEPTACLES

USE PACKAGING TRAY 46077-0003

NUMBER OF BAYS	MATERIAL NUMBER SUFFIX	NUMBER OF CIRCUITS	PARTS PER CHANNEL	PARTS PER TRAY	STANDARD PACK QUANTITY PER PRIMARY CARTON (SPQ)
(1) 45984-21**	11,12, 13, 23	12	13	65	260
	21, 22, 93	16	12	60	240
	31, 32, 33	20	11	55	220
	41, 42, 43	24	10	50	200
	51, 52, 53	28	9	45	180
	61, 62, 63	32	9	45	180
	71, 72, 73	36	8	40	160
	81, 82, 83	40	7	35	140
(2) 45984-41**	11, 12, 13	12	9	45	180
	21, 22, 23	16	8	40	160
	31, 32, 33	20	8	40	160
	41, 42, 43	24	7	35	140
	51, 52, 53	28	7	35	140
	61, 62, 63	32	6	30	120
	71, 72, 73	36	6	30	120
	81, 82, 83	40	6	30	120
(3) 45984-61**	11, 12, 13	12	6	30	120
	21, 22, 23	16	6	30	120
	31, 32, 33	20	6	30	120
	41, 42, 43	24	5	25	100
	51, 52, 53	28	5	25	100
	61, 62, 63	32	5	25	100
	71, 72, 73	36	5	25	100
	81, 82, 83	40	5	25	100
(4) 45984-81**	11, 12, 13	12	5	25	100
	21, 22, 23	16	5	25	100
	31, 32, 33	20	5	25	100
	41, 42, 43	24	4	20	80
	51, 52, 53	28	4	20	80
	61, 62, 63	32	4	20	80
	71, 72, 73	36	4	20	80
	81, 82, 83	40	4	20	80
(5) 45984-11**	11, 12, 13	12	4	20	80
	21, 22, 23	16	4	20	80
	31, 32, 33	20	4	20	80
	41, 42, 43	24	4	20	80
	51, 52, 53	28	3	15	60
	61, 62, 63	32	3	15	60
	71, 72, 73	36	3	15	60
	81, 82, 83	40	3	15	60

RECEPTACLES WITH PEGS

USE PACKAGING TRAY 46077-0003

NUMBER OF BAYS	MATERIAL NUMBER SUFFIX	NUMBER OF CIRCUITS	PARTS PER CHANNEL	PARTS PER TRAY	STANDARD PACK QUANTITY PER PRIMARY CARTON (SPQ)
(1) 45984-23**	11, 12, 13	12	11	55	220
	21, 22, 23	16	10	50	200
	31, 32, 33	20	9	45	180
	91, 42, 43	24	8	40	160
	51, 52, 53	28	8	40	160
	61, 62, 63	32	7	35	140
	71, 72, 73	36	7	35	140
	81, 82, 83	40	6	30	120
(2) 45984-43**	11, 12, 13	12	7	35	140
	21, 22, 23	16	7	35	140
	31, 32, 33	20	7	35	140
	41, 42, 43	24	6	30	120
	51, 52, 53	28	6	30	120
	61, 62, 63	32	6	30	120
	71, 72, 73	36	5	25	100
	81, 82, 83	40	5	25	100
(3) 45984-63**	11, 12, 13	12	6	30	120
	21, 22, 23	16	5	25	100
	31, 32, 33	20	5	25	100
	41, 42, 43	24	5	25	100
	51, 52, 53	28	5	25	100
	61, 62, 63	32	4	20	80
	71, 72, 73	36	4	20	80
	81, 82, 83	40	4	20	80
(4) 45984-83**	11, 12, 13	12	5	25	100
	21, 22, 23	16	4	20	80
	31, 32, 33	20	4	20	80
	41, 42, 43	24	4	20	80
	51, 52, 53	28	4	20	80
	61, 62, 63	32	4	20	80
	71, 72, 73	36	4	20	80
	81, 82, 83	40	3	15	60
(5) 45984-13**	11, 12, 13	12	4	20	80
	21, 22, 23	16	4	20	80
	31, 32, 33	20	3	15	60
	41, 42, 43	24	3	15	60
	51, 52, 53	28	3	15	60
	61, 62, 63	32	3	15	60
	71, 72, 73	36	3	15	60
	81, 82, 83	40	3	15	60

STANDARD PLUGS

USE PACKAGING TRAY 46077-0003

NUMBER OF BAYS	MATERIAL NUMBER SUFFIX	NUMBER OF CIRCUITS	PARTS PER CHANNEL	PARTS PER TRAY	STANDARD PACK QUANTITY PER PRIMARY CARTON (SPQ)
(1) 45985-21**	11, 12, 13	12	13	65	260
	21, 22, 23	16	12	60	240
	31, 32, 33	20	11	55	220
	41, 42, 43	24	10	50	200
	51, 52, 53	28	9	45	180
	61, 62, 63	32	8	40	160
	71, 72, 73	36	8	40	160
	81, 82, 83	40	7	35	140
(2) 45985-41**	11, 12, 13	12	9	45	180
	21, 22, 23	16	8	40	160
	31, 32, 33	20	7	35	140
	41, 42, 43	24	7	35	140
	51, 52, 53	28	7	35	140
	61, 62, 63	32	6	30	120
	71, 72, 73	36	6	30	120
	81, 82, 83	40	6	30	120
(3) 45985-61**	11, 12, 13	12	6	30	120
	21, 22, 23	16	6	30	120
	31, 32, 33	20	6	30	120
	41, 42, 43	24	5	25	100
	51, 52, 53	28	5	25	100
	61, 62, 63	32	5	25	100
	71, 72, 73	36	5	25	100
	81, 82, 83	40	4	20	80
(4) 45985-81**	11, 12, 13	12	5	25	100
	21, 22, 23	16	5	25	100
	31, 32, 33	20	5	25	100
	41, 42, 43	24	4	20	80
	51, 52, 53	28	4	20	80
	61, 62, 63	32	4	20	80
	71, 72, 73	36	4	20	80
	81, 82, 83	40	4	20	80
(5) 45985-11**	11, 12, 13	12	4	20	80
	21, 22, 23	16	4	20	80
	31, 32, 33	20	4	20	80
	41, 42, 43	24	4	20	80
	51, 52, 53	28	3	15	60
	61, 62, 63	32	3	15	60
	71, 72, 73	36	3	15	60
	81, 82, 83	40	3	15	60

PLUGS WITH GUIDES AND/OR PEGS

USE PACKAGING TRAY 46077-0003

NUMBER OF BAYS	MATERIAL NUMBER SUFFIX	NUMBER OF CIRCUITS	PARTS PER CHANNEL	PARTS PER TRAY	STANDARD PACK QUANTITY PER PRIMARY CARTON (SPQ)
(1) 45985-22** 45985-23** 45985-24**	11, 12, 13	12	10	50	200
	21, 22, 23	16	9	45	180
	31, 32, 33	20	8	40	160
	41, 42, 43	24	8	40	160
	51, 52, 53	28	7	35	140
	61, 62, 63	32	7	35	140
	71, 72, 73	36	6	30	120
	81, 82, 83	40	6	30	120
(2) 45985-42** 45985-43** 45985-44**	11, 12, 13	12	7	35	140
	21, 22, 23	16	7	35	140
	31, 32, 33	20	6	30	120
	41, 42, 43	24	6	30	120
	51, 52, 53	28	6	30	120
	61, 62, 63	32	5	25	100
	71, 72, 73	36	5	25	100
	81, 82, 83	40	5	25	100
(3) 45985-62** 45985-63** 45985-64**	11, 12, 13	12	5	25	100
	21, 22, 23	16	5	25	100
	31, 32, 33	20	5	25	100
	41, 42, 43	24	5	25	100
	51, 52, 53	28	5	25	100
	61, 62, 63	32	4	20	80
	71, 72, 73	36	4	20	80
	81, 82, 83	40	4	20	80
(4) 45985-82** 45985-83** 45985-84**	11, 12, 13	12	4	20	80
	21, 22, 23	16	4	20	80
	31, 32, 33	20	4	20	80
	41, 42, 43	24	4	20	80
	51, 52, 53	28	4	20	80
	61, 62, 63	32	4	20	80
	71, 72, 73	36	4	20	80
	81, 82, 83	40	3	15	60
(5). 45985-12** 45985-13** 45985-14**	11, 12, 13	12	4	20	80
	21, 22, 23	16	4	20	80
	31, 32, 33	20	3	15	60
	41, 42, 43	24	3	15	60
	51, 52, 53	28	3	15	60
	61, 62, 63	32	3	15	60
	71, 72, 73	36	3	15	60
	81, 82, 83	40	3	15	60

RECEPTACLES WITH GUIDES/GUIDES & PEGS

USE PACKAGING TRAY 46077-0004

NUMBER OF BAYS	MATERIAL NUMBER SUFFIX	NUMBER OF CIRCUITS	PARTS PER CHANNEL	PARTS PER TRAY	STANDARD PACK QUANTITY PER PRIMARY CARTON (SPQ)
(1) 45984-22** 45984-24**	11, 12, 13	12	11	55	220
	21, 22, 23	16	10	50	200
	31, 32, 33	20	9	45	180
	41, 42, 43	24	8	40	160
	51, 52, 53	28	8	40	160
	61, 62, 63	32	7	35	140
	71, 72, 73	36	7	35	140
	81, 82, 83	40	6	30	120
(2) 45984-42** 45984-44**	11, 12, 13	12	7	35	140
	21, 22, 23	16	7	35	140
	31, 32, 33	20	7	35	140
	41, 42, 43	24	6	30	120
	51, 52, 53	28	6	30	120
	61, 62, 63	32	6	30	120
	71, 72, 73	36	5	25	100
	81, 82, 83	40	5	25	100
(3) 45984-62** 45984-64**	11, 12, 13	12	6	30	120
	21, 22, 23	16	5	25	100
	31, 32, 33	20	5	25	100
	41, 42, 43	24	5	25	100
	51, 52, 53	28	5	25	100
	61, 62, 63	32	4	20	80
	71, 72, 73	36	4	20	80
	81, 82, 83	40	4	20	80
(4) 45984-82** 45984-84**	11, 12, 13	12	5	25	100
	21, 22, 23	16	4	20	80
	31, 32, 33	20	4	20	80
	41, 42, 43	24	4	20	80
	51, 52, 53	28	4	20	80
	61, 62, 63	32	4	20	80
	71, 72, 73	36	4	20	80
	81, 82, 83	40	3	15	60
(5) 45984-12** 45984-14**	11, 12, 13	12	4	20	80
	21, 22, 23	16	4	20	80
	31, 32, 33	20	3	15	60
	41, 42, 43	24	3	15	60
	51, 52, 53	28	3	15	60
	61, 62, 63	32	3	15	60
	71, 72, 73	36	3	15	60
	81, 82, 83	40	3	15	60

RECEPTACLES WITH GUIDES/GUIDES & PEGS

USE PACKAGING TRAY 46077-0004

NUMBER OF BAYS	MATERIAL NUMBER	NUMBER OF CIRCUITS	PARTS PER CHANNEL	PARTS PER TRAY	STANDARD PACK QUANTITY PER PRIMARY CARTON (SPQ)
(3)	45984-0033	16	5	25	100
(4)	45984-8409	20	4	20	80

PLUGS WITH GUIDES AND/OR PEGS

USE PACKAGING TRAY 46077-0003

NUMBER OF BAYS	MATERIAL NUMBER	NUMBER OF CIRCUITS	PARTS PER CHANNEL	PARTS PER TRAY	STANDARD PACK QUANTITY PER PRIMARY CARTON (SPQ)
(3)	45985-0033	16	5	25	100
(4)	45985-0034	12	4	20	80
	45985-8409	20	4	20	80
(2)	45985-4572	36	5	25	100
	45985-5572	36	5	25	100
N2 (2)	45985-5100	16	7	35	140

* REFER TO SHEET 4 FOR MATERIAL NUMBERS WITH SUFFIXS -00**.

THIS DRAWING CONTAINS INFORMATION THAT IS PROPRIETARY TO MOLEX ELECTRONIC TECHNOLOGIES, LLC AND SHOULD NOT BE USED WITHOUT WRITTEN PERMISSION

FUNCTIONAL SYMBOLS: FA = 0, FC = 0, FP = 0

DIVISIONAL SYMBOLS

DIMENSION UNITS: mm

SCALE: 1:1

GENERAL TOLERANCES (UNLESS SPECIFIED)

	MM	INCH
4 PLACES	±	±
3 PLACES	±	±
2 PLACES	± 0.13	±
1 PLACE	± 0.25	±
0 PLACES	±	±
ANGULAR TOL	± 0.5 °	

DRAFT WHERE APPLICABLE MUST REMAIN WITHIN DIMENSIONS

CURRENT REV DESC:

EC NO: 716205
DRWN: CHETAB 2022/07/21
CHK'D: MBELLE 2022/08/10
APPR: HTHYAGARAJ 2022/08/18

INITIAL REVISION:
DRWN: BANDURA 2006/04/19
APPR: APATEL 2006/05/18

molex

PACKAGING SPECIFICATION
LOW PROFILE HYBRID 45984 & 45985 SERIES

PACKAGING DESIGN DRAWING

DOCUMENT NUMBER	DOC TYPE	DOC PART	REVISION
PK-45984-001	PDD	001	N2

THIRD ANGLE PROJECTION | DRAWING: A1-SIZE | SERIES: 45984 | MATERIAL NUMBER: SEE TABLE | CUSTOMER: GENERAL MARKET | SHEET NUMBER: 2 OF 4

DOCUMENT STATUS	P1	RELEASE DATE	2022/08/18 11:53:44

STANDARD POWER RECEPTACLES

USE PACKAGING TRAY 46077-0003

NUMBER OF BAYS	MATERIAL NUMBER	NUMBER OF CIRCUITS	PARTS PER CHANNEL	PARTS PER TRAY	STANDARD PACK QUANTITY PER PRIMARY CARTON (SPQ)
(1)	45984-2911	2	25	125	500
	45984-2921	2	25	125	500
	45984-2931	2	25	125	500
(2)	45984-4911	4	13	65	260
	45984-4921	4	13	65	260
	45984-4931	4	13	65	260
(3)	45984-6911	6	8	40	160
	45984-6921	6	8	40	160
	45984-6931	6	8	40	160
(4)	45984-8911	8	6	30	120
	45984-8921	8	6	30	120
	45984-8931	8	6	30	120
(5)	45984-1911	10	5	25	100
	45984-1921	10	5	25	100
	45984-1931	10	5	25	100

POWER RECEPTACLES w/GUIDES/GUIDES & PEGS

USE PACKAGING TRAY 46077-0004

NUMBER OF BAYS	MATERIAL NUMBER	NUMBER OF CIRCUITS	PARTS PER CHANNEL	PARTS PER TRAY	STANDARD PACK QUANTITY PER PRIMARY CARTON (SPQ)
(1)	45984-2912	2	17	85	340
	45984-2914	2	17	85	340
	45984-2922	2	17	85	340
	45984-2924	2	17	85	340
	45984-2932	2	17	85	340
	45984-2934	2	17	85	340
(2)	45984-4912	4	9	45	180
	45984-4914	4	9	45	180
	45984-4922	4	9	45	180
	45984-4924	4	9	45	180
	45984-4932	4	9	45	180
	45984-4934	4	9	45	180
(3)	45984-6912	6	7	35	140
	45984-6914	6	7	35	140
	45984-6922	6	7	35	140
	45984-6924	6	7	35	140
	45984-6932	6	7	35	140
	45984-6934	6	7	35	140
(4)	45984-8912	8	5	25	100
	45984-8914	8	5	25	100
	45984-8922	8	5	25	100
	45984-8924	8	5	25	100
	45984-8932	8	5	25	100
	45984-8934	8	5	25	100
(5)	45984-1912	10	4	20	80
	45984-1914	10	4	20	80
	45984-1922	10	4	20	80
	45984-1924	10	4	20	80
	45984-1932	10	4	20	80
	45984-1934	10	4	20	80

POWER RECEPTACLES WITH PEGS

USE PACKAGING TRAY 46077-0003

NUMBER OF BAYS	MATERIAL NUMBER	NUMBER OF CIRCUITS	PARTS PER CHANNEL	PARTS PER TRAY	STANDARD PACK QUANTITY PER PRIMARY CARTON (SPQ)
(1)	45984-2913	2	17	85	340
	45984-2923	2	17	85	340
	45984-2933	2	17	85	340
(2)	45984-4913	4	9	45	180
	45984-4923	4	9	45	180
	45984-4933	4	9	45	180
(3)	45984-6913	6	7	35	140
	45984-6923	6	7	35	140
	45984-6933	6	7	35	140
(4)	45984-8913	8	5	25	100
	45984-8923	8	5	25	100
	45984-8933	8	5	25	100
(5)	45984-1913	10	4	20	80
	45984-1923	10	4	20	80
	45984-1933	10	4	20	80

STANDARD POWER PLUGS

USE PACKAGING TRAY 46077-0003

NUMBER OF BAYS	MATERIAL NUMBER	NUMBER OF CIRCUITS	PARTS PER CHANNEL	PARTS PER TRAY	STANDARD PACK QUANTITY PER PRIMARY CARTON (SPQ)
(1)	45985-2911	2	25	125	500
	45985-2921	2	25	125	500
	45985-2931	2	25	125	500
(2)	45985-4911	4	13	65	260
	45985-4921	4	13	65	260
	45985-4931	4	13	65	260
(3)	45985-6911	6	8	40	160
	45985-6921	6	8	40	160
	45985-6931	6	8	40	160
(4)	45985-8911	8	6	30	120
	45985-8921	8	6	30	120
	45985-8931	8	6	30	120
(5)	45985-1911	10	5	25	100
	45985-1921	10	5	25	100
	45985-1931	10	5	25	100

POWER PLUGS w/PEGS/GUIDES/GUIDES & PEGS

USE PACKAGING TRAY 46077-0003

NUMBER OF BAYS	MATERIAL NUMBER	NUMBER OF CIRCUITS	PARTS PER CHANNEL	PARTS PER TRAY	STANDARD PACK QUANTITY PER PRIMARY CARTON (SPQ)
(1)	45985-2912	2	15	75	300
	45985-2913	2	15	75	300
	45985-2914	2	15	75	300
	45985-2922	2	15	75	300
	45985-2923	2	15	75	300
	45985-2924	2	15	75	300
	45985-2932	2	15	75	300
	45985-2933	2	15	75	300
	45985-2934	2	15	75	300
(2)	45985-4912	4	9	45	180
	45985-4913	4	9	45	180
	45985-4914	4	9	45	180
	45985-4922	4	9	45	180
	45985-4923	4	9	45	180
	45985-4924	4	9	45	180
	45985-4932	4	9	45	180
	45985-4933	4	9	45	180
	45985-4934	4	9	45	180
(3)	45985-6912	6	7	35	140
	45985-6913	6	7	35	140
	45985-6914	6	7	35	140
	45985-6922	6	7	35	140
	45985-6923	6	7	35	140
	45985-6924	6	7	35	140
	45985-6932	6	7	35	140
	45985-6933	6	7	35	140
	45985-6934	6	7	35	140
(4)	45985-8912	8	5	25	100
	45985-8913	8	5	25	100
	45985-8914	8	5	25	100
	45985-8922	8	5	25	100
	45985-8923	8	5	25	100
	45985-8924	8	5	25	100
	45985-8932	8	5	25	100
	45985-8933	8	5	25	100
	45985-8934	8	5	25	100
(5)	45985-1912	10	4	20	80
	45985-1913	10	4	20	80
	45985-1914	10	4	20	80
	45985-1922	10	4	20	80
	45985-1923	10	4	20	80
	45985-1924	10	4	20	80
	45985-1932	10	4	20	80
	45985-1933	10	4	20	80
	45985-1934	10	4	20	80

SIGNAL RECPT. WITH GUIDES/GUIDES & PEGS

USE PACKAGING TRAY 46077-0004

PART NUMBER	MATERIAL NUMBER SUFFIX	NUMBER OF CIRCUITS	PARTS PER CHANNEL	PARTS PER TRAY	STANDARD PACK QUANTITY PER PRIMARY CARTON (SPQ)
45984-02** 45984-04**	11, 12, 13	12	18	90	360
	21, 22, 23	16	16	80	320
	31, 32, 33	20	14	70	280
	41, 42, 43	24	13	65	260
	51, 52, 53	28	11	55	220
	61, 62, 63	32	10	50	200
	71, 72, 73	36	9	45	180
	81, 82, 83	40	9	45	180

SIGNAL RECPT. STANDARD & w/PEGS

REFER TO PK-45984-002

PART NUMBER	MATERIAL NUMBER SUFFIX	NUMBER OF CIRCUITS	PARTS PER CHANNEL	PARTS PER TRAY	STANDARD PACK QUANTITY PER PRIMARY CARTON (SPQ)
45984-01** 45984-03**	11, 12, 13	12	REFER TO PK-45984-002		
	21, 22, 23	16			
	31, 32, 33	20			
	41, 42, 43	24			
	51, 52, 53	28			
	61, 62, 63	32			
	71, 72, 73	36			
	81, 82, 83	40			

STANDARD SIGNAL PLUGS

USE PACKAGING TRAY 46077-0003

PART NUMBER	MATERIAL NUMBER SUFFIX	NUMBER OF CIRCUITS	PARTS PER CHANNEL	PARTS PER TRAY	STANDARD PACK QUANTITY PER PRIMARY CARTON (SPQ)
45985-01**	11, 12, 13	12	25	125	500
	21, 22, 23	16	21	105	420
	31, 32, 33	20	18	90	360
	41, 42, 43	24	16	80	320
	51, 52, 53	28	14	70	280
	61, 62, 63	32	13	65	260
	71, 72, 73	36	11	55	220
	81, 82, 83	40	10	50	200

SIGNAL PLUGS w/PEGS/GUIDES/GUIDES & PEGS

USE PACKAGING TRAY 46077-0003

PART NUMBER	MATERIAL NUMBER SUFFIX	NUMBER OF CIRCUITS	PARTS PER CHANNEL	PARTS PER TRAY	STANDARD PACK QUANTITY PER PRIMARY CARTON (SPQ)
45985-02** 45985-03** 45985-04**	11, 12, 13	12	16	80	320
	21, 22, 23	16	14	70	280
	31, 32, 33	20	12	60	240
	41, 42, 43	24	11	55	220
	51, 52, 53	28	10	50	200
	61, 62, 63	32	10	50	200
	71, 72, 73	36	9	45	180
	81, 82, 83	40	8	40	160

THIS DRAWING CONTAINS INFORMATION THAT IS PROPRIETARY TO MOLEX ELECTRONIC TECHNOLOGIES, LLC AND SHOULD NOT BE USED WITHOUT WRITTEN PERMISSION

FUNCTIONAL SYMBOLS: FA = 0, FC = 0, FP = 0

DIVISIONAL SYMBOLS

DIMENSION UNITS: mm

SCALE: 1:1

GENERAL TOLERANCES (UNLESS SPECIFIED)

	MM	INCH
4 PLACES	±	±
3 PLACES	±	±
2 PLACES	± 0.13	±
1 PLACE	± 0.25	±
0 PLACES	±	±
ANGULAR TOL	± 0.5 °	

DRAFT WHERE APPLICABLE MUST REMAIN WITHIN DIMENSIONS

CURRENT REV DESC:

EC NO: 716205
DRWN: CHETAB 2022/07/21
CHK'D: MBELLE 2022/08/10
APPR: HTHYAGARAJ 2022/08/18

INITIAL REVISION:
DRWN: BANDURA 2006/04/19
APPR: APATEL 2006/05/18

THIRD ANGLE PROJECTION

DRAWING: A1-SIZE

SERIES: 45984

molex

PACKAGING SPECIFICATION
LOW PROFILE HYBRID 45984 & 45985 SERIES

PACKAGING DESIGN DRAWING

DOCUMENT NUMBER	DOC TYPE	DOC PART	REVISION
PK-45984-001	PDD	001	N2

MATERIAL NUMBER	CUSTOMER	SHEET NUMBER
SEE TABLE	GENERAL MARKET	3 OF 4

DOCUMENT STATUS	P1	RELEASE DATE	2022/08/18 11:53:44

STANDARD RECEPTACLES

USE PACKAGING TRAY 46077-0003

NUMBER OF BAYS	MATERIAL NUMBER	NUMBER OF CIRCUITS	PARTS PER CHANNEL	PARTS PER TRAY	STANDARD PACK QUANTITY PER PRIMARY CARTON (SPQ)
3	45984-0003	24	5	25	100
5	45984-0007	16	4	20	80
2	45984-0008	24	7	35	140
2	45984-0017	24	7	35	140
2	45984-0019	16	8	40	160
5	45984-0025	16	4	20	80

RECEPTACLES WITH PEGS

USE PACKAGING TRAY 46077-0003

NUMBER OF BAYS	MATERIAL NUMBER	NUMBER OF CIRCUITS	PARTS PER CHANNEL	PARTS PER TRAY	STANDARD PACK QUANTITY PER PRIMARY CARTON (SPQ)
2	45984-0005	24	6	30	120
4	45984-0010	12	5	25	100
4	45984-0009	24	4	20	80
2	45984-0011	24	6	30	120

RECEPTACLES WITH GUIDES/GUIDES & PEGS

USE PACKAGING TRAY 46077-0004

NUMBER OF BAYS	MATERIAL NUMBER	NUMBER OF CIRCUITS	PARTS PER CHANNEL	PARTS PER TRAY	STANDARD PACK QUANTITY PER PRIMARY CARTON (SPQ)
4	45984-0002	24	4	20	80
4	45984-0009	24	4	20	80
3	45984-0018	24	5	25	100
2	45984-0020	16	7	35	140
2	45984-0023	16	7	35	140

PLUGS WITH GUIDES AND/OR PEGS

USE PACKAGING TRAY 46077-0003

NUMBER OF BAYS	MATERIAL NUMBER	NUMBER OF SIGNALS	PARTS PER CHANNEL	PARTS PER TRAY	STANDARD PACK QUANTITY PER PRIMARY CARTON (SPQ)
4	45985-0002	24	4	20	80
3	45985-0004	12	6	30	120
2	45985-0005	24	6	30	120
4	45985-0006	40	3	15	60
4	45985-0007	20	4	20	80
3	45985-0008	12	5	25	100
5	45985-0009	32	3	15	60
6	45985-0010	24	6	30	120
2	45985-0012	20	6	30	120
2	45985-0013	12	7	35	140
2	45985-0014	12	7	35	140
3	45985-0015	12	5	25	100
2	45985-0016	16	7	35	140
2	45985-0017	40	5	25	100
4	45985-0018	40	3	15	60
4	45985-0020	12	4	20	80
4	45985-0021	40	3	15	60
2	45985-0022	12	7	35	140
3	45985-0023	20	5	25	100
4	45985-0027	12	4	20	80
2	45985-0028	16	7	35	140
2	45985-0030	16	7	35	140

DOCUMENT STATUS	P1	RELEASE DATE	2022/08/18 11:53:44

FUNCTIONAL SYMBOLS: FA = 0, FC = 0, FP = 0

DIVISIONAL SYMBOLS

THIS DRAWING CONTAINS INFORMATION THAT IS PROPRIETARY TO MOLEX ELECTRONIC TECHNOLOGIES, LLC AND SHOULD NOT BE USED WITHOUT WRITTEN PERMISSION

DIMENSION UNITS	SCALE
mm	1:1

GENERAL TOLERANCES (UNLESS SPECIFIED)

	MM	INCH
4 PLACES	±	±
3 PLACES	±	±
2 PLACES	± 0.13	±
1 PLACE	± 0.25	±
0 PLACES	±	±
ANGULAR TOL	± 0.5 °	

DRAFT WHERE APPLICABLE MUST REMAIN WITHIN DIMENSIONS

CURRENT REV DESC:

EC NO: 716205
DRWN: CHETAB 2022/07/21
CHK'D: MBELLE 2022/08/10
APPR: HTHYAGARAJ 2022/08/18

INITIAL REVISION:
DRWN: BANDURA 2006/04/19
APPR: APATEL 2006/05/18

THIRD ANGLE PROJECTION

DRAWING	SERIES
A1-SIZE	45984

molex

PACKAGING SPECIFICATION
LOW PROFILE HYBRID 45984 & 45985 SERIES

PACKAGING DESIGN DRAWING

DOCUMENT NUMBER	DOC TYPE	DOC PART	REVISION
PK-45984-001	PDD	001	N2

MATERIAL NUMBER	CUSTOMER	SHEET NUMBER
SEE TABLE	GENERAL MARKET	4 OF 4

FORMAT: Mx4 logo master 3b proto A1
dwg-size: A
DATE: 2006/01/14