© – TE Connectivity. All Rights Reserved.

REVISIONS					
P	LTR	DESCRIPTION	DATE	DWN	APVD
	C1	REV PER ECO-20-004668	08JUN2020	ML	SZ

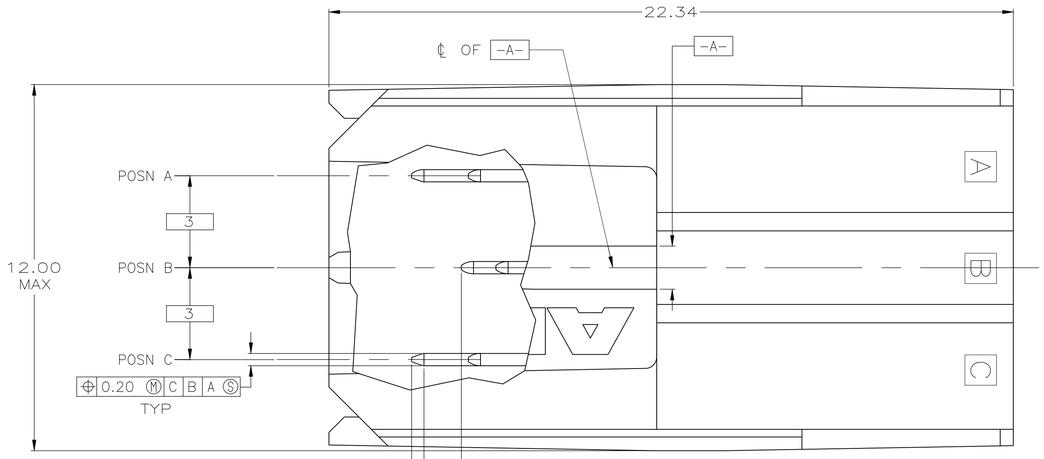

1. MATERIAL: HOUSING: POLYESTER. COLOR: GRAY. UL 94V-O.
   CONTACT: PHOSPHOR BRONZE.
2. FINISH: IN ACCORDANCE WITH PRODUCT SPECIFICATION 108-1651, GOLD PLATING OR EQUIVALENT PLATING ON PRODUCT CONTACT MATING AREA, AND MATTE TIN PLATING ON COMPLIANT PIN AREA, ALL OVER MATTE NICKEL UNDERPLATED. DETAIL PLEASE REFER TO PRODUCT SPECIFICATION 108-1651.
3. FINISH: CONTACT LUBRICATION WITH BELLCORE APPROVED LUBRICANT. TECHNICAL REFERENCE: TR-NWT-001217 ISSUE 1, SEPT 1992.
4. REFERENCE APPLICATION SPEC 114-1103 FOR RECOMMENDED PLATED THRU HOLE DIAMETER AND PLATING THICKNESS.
5. CURRENT RATING 10A/CONTACT PER PRODUCT SPEC 108-1651.

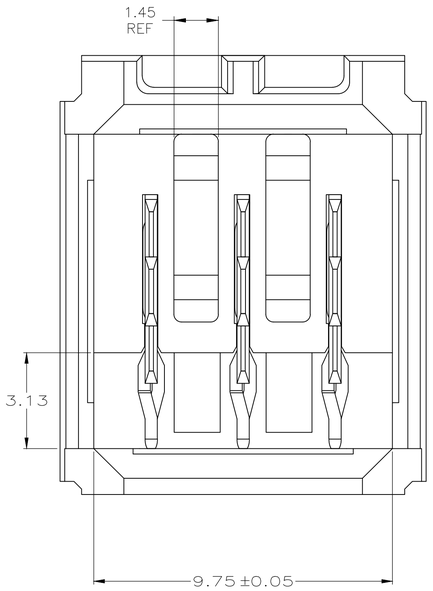

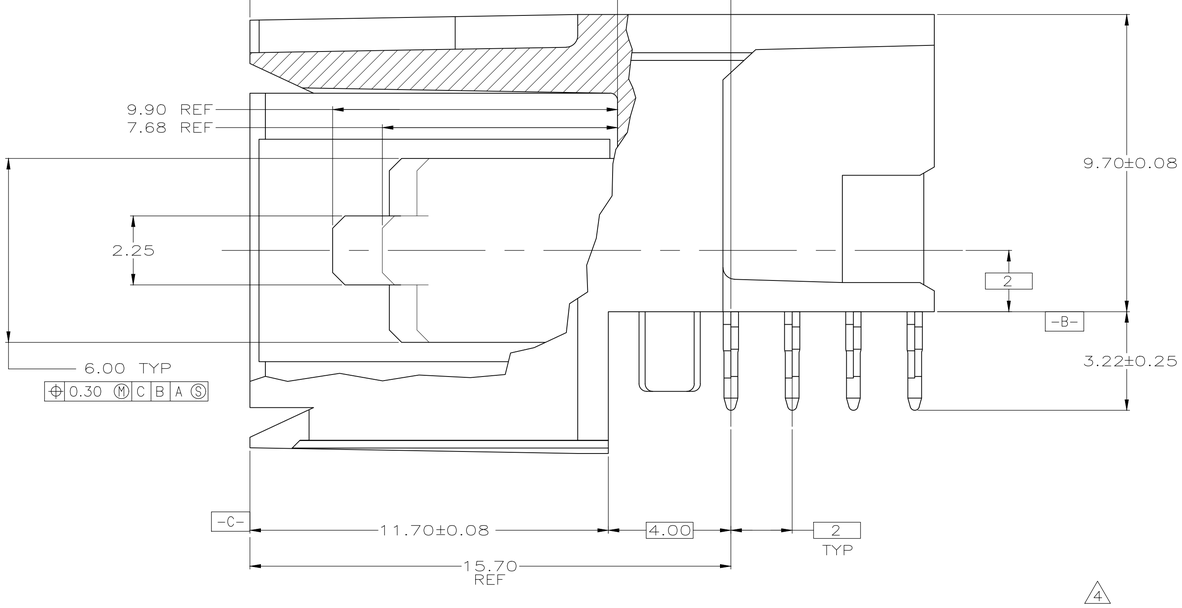

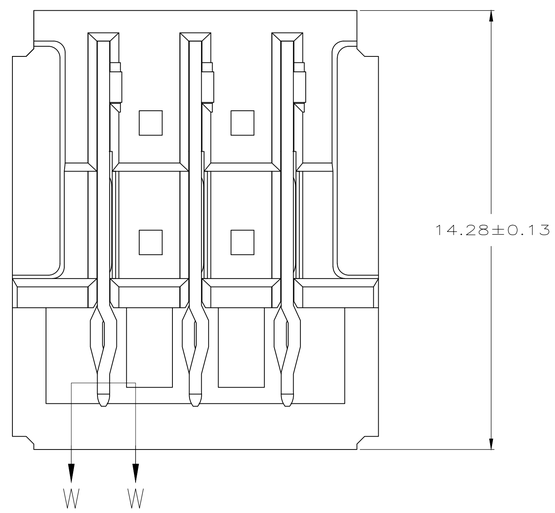

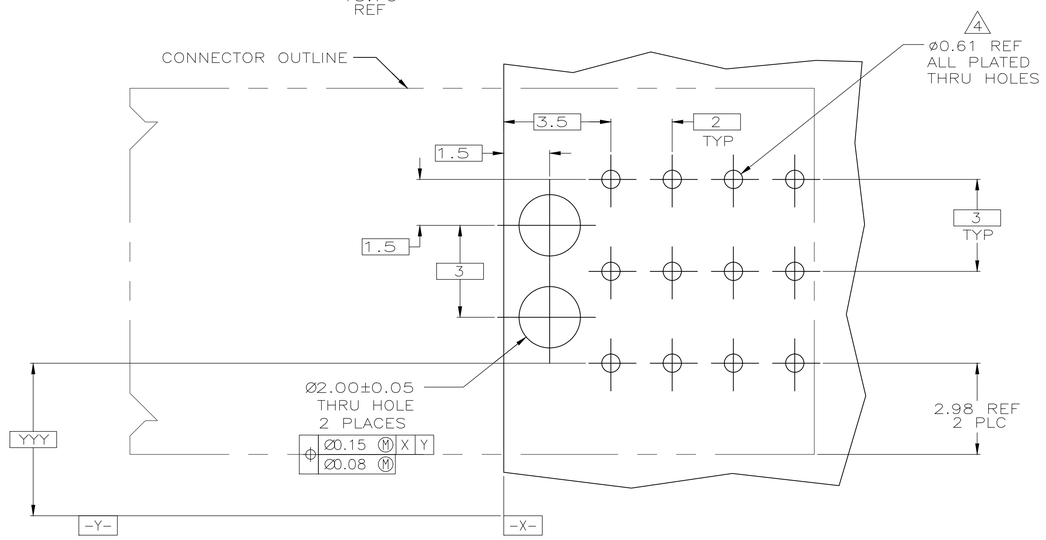

RECOMMENDED PCB HOLE LAYOUT

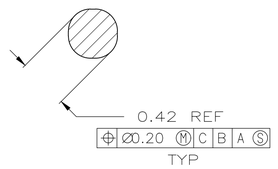

SECTION W-W
SCALE 40:1

5223965-1
PART NUMBER

THIS DRAWING IS A CONTROLLED DOCUMENT.	DWN R.CARBO 10DEC04	TE Connectivity	
DIMENSIONS: mm	CHK R.PATTERSON 10DEC04	NAME RIGHT ANGLE HEADER ASSY W/ RETENTION PEGS SEQUENCED UNIVERSAL POWER MODULE	
TOLERANCES UNLESS OTHERWISE SPECIFIED: 0 PLC ± – 1 PLC ± – 2 PLC ± 0.13 3 PLC ± – 4 PLC ± – ANGLES ± –	APVD R.PATTERSON 10DEC04		
	PRODUCT SPEC 108-1651		
	APPLICATION SPEC 114-1103	SIZE A1 / CAGE CODE 00779 / DRAWING NO C-5223965	RESTRICTED TO –
MATERIAL 1	FINISH 2 3	WEIGHT 0.000000	
		CUSTOMER DRAWING	SCALE 10:1 / SHEET 1 OF 1 / REV C1

4805 (1/15)