© – TE Connectivity. All Rights Reserved.

REVISIONS					
P	LTR	DESCRIPTION	DATE	DWN	APVD
	E7	ADDED –53	17APR2023	DP	HW

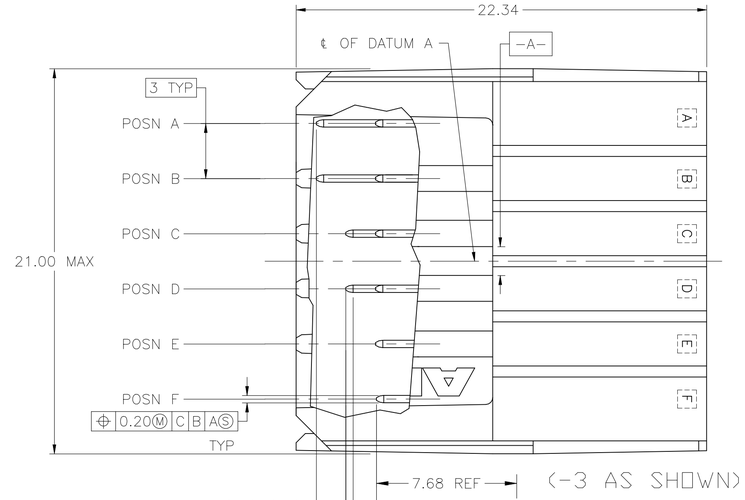

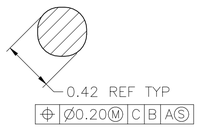

SECTION W–W
SCALE 40:1

1. MATERIAL: HOUSING: POLYESTER. COLOR: GRAY. UL 94V–O. CONTACT: COPPER ALLOY.
2. FINISH: IN ACCORDANCE WITH PRODUCT SPECIFICATION 108–1651, GOLD PLATING OR EQUIVALENT PLATING ON PRODUCT CONTACT MATING AREA, AND MATTE TIN PLATING ON COMPLIANT PIN AREA, ALL OVER MATTE NICKEL UNDERPLATED. DETAIL PLEASE REFER TO PRODUCT SPECIFICATION 108–1651.
3. FINISH: CONTACT LUBRICATION WITH BELLCORE APPROVED LUBRICANT. TECHNICAL REFERENCE: GR–1217–CORE, ISSUE 1, NOVEMBER 1995.
4. THE 10.26±0.13 DIMENSION APPLIES IN THIS AREA.
5. REFERENCE APPLICATION SPEC 114–1103 FOR RECOMMENDED PLATED THRU HOLE DIAMETER AND PLATING THICKNESS.
6. CURRENT RATING 10A/CONTACT PER PRODUCT SPEC 108–1651.
7. HALOGEN FREE PART

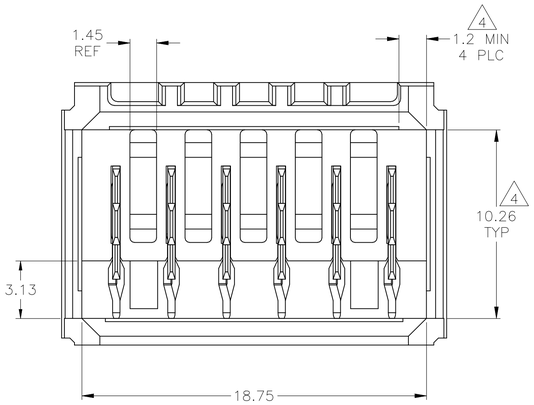

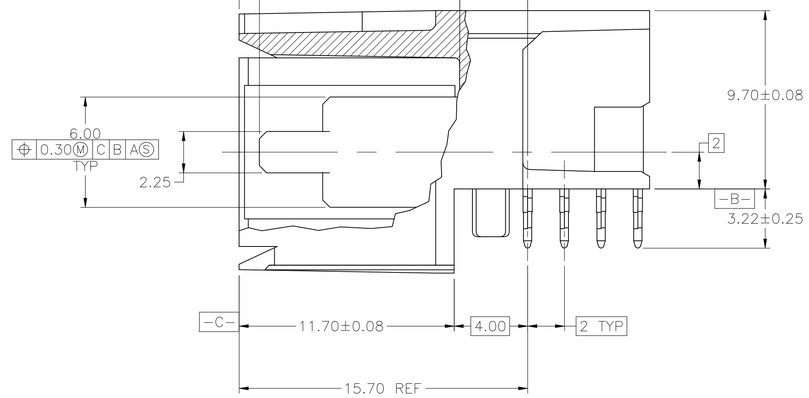

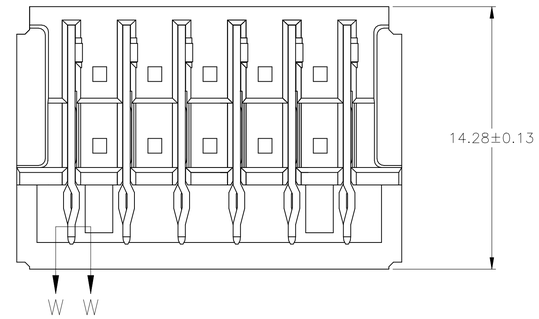

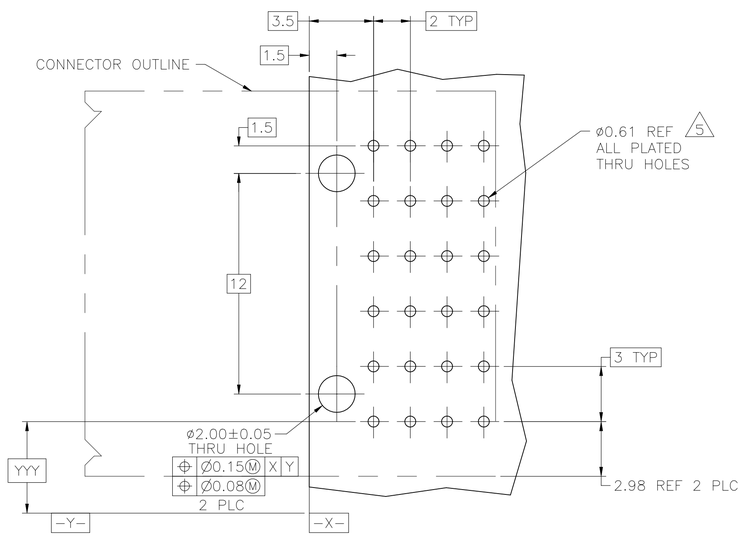

RECOMMENDED PCB HOLE LAYOUT

7	2 3	A,B	C,D	E,F	6	5–5646956–3
	2 3	–	A,B,C,D,E,F	–	6	5646956–8
	2 3	D,E,F	–	A,B,C	6	5646956–7
	2 3	–	A,B,C,D	E,F	6	5646956–6
	2 3	~~A,B~~	~~D,E,F~~	~~C~~	~~6~~	~~5646956–5~~
	2 3	A,D,E,F	B	C	6	5646956–4
	2 3	A,B	C,D	E,F	6	5646956–3
	2 3	A,F	B,C,D,E	–	6	5646956–2
	2 3	A,B,C,D,E,F	–	–	6	5646956–1
	FINISH	POSITIONS LOADED WITH 10.90 (2) CONTACTS	POSITIONS LOADED WITH 9.30 (3) CONTACTS	POSITIONS LOADED WITH 7.68 (4) CONTACTS	NO OF LOADED POSITIONS	PART NUMBER

DELETED

THIS DRAWING IS A CONTROLLED DOCUMENT.

DIMENSIONS: mm

TOLERANCES UNLESS OTHERWISE SPECIFIED:
0 PLC ± –
1 PLC ± –
2 PLC ± 0.13
3 PLC ± –
4 PLC ± –
ANGLES ± –

MATERIAL 1
FINISH 2

DWN B.CARBO 04JAN05
CHK R.PATTERSON 04JAN05
APVD R.PATTERSON 04JAN05
PRODUCT SPEC 108–1651
APPLICATION SPEC 114–1103
WEIGHT 0.000000
CUSTOMER DRAWING

TE Connectivity

NAME
ASSEMBLY, RIGHT ANGLE HEADER, W/ RETENTION PEGS, UNIVERSAL POWER MODULE

SIZE	CAGE CODE	DRAWING NO	RESTRICTED TO
A1	00779	C–5646956	–

SCALE 6:1 SHEET 1 OF 1 REV E7

4805 (1/15)