THIS DRAWING IS UNPUBLISHED. RELEASED FOR PUBLICATION -,- .
© COPYRIGHT - BY TYCO ELECTRONICS CORPORATION. ALL INTERNATIONAL RIGHTS RESERVED.

LOC	DIST
AD	00

REVISIONS

P	LTR	DESCRIPTION	DATE	DWN	APVD
	F	REVISED PER ECO-11-000045	04JAN11	DH	DY

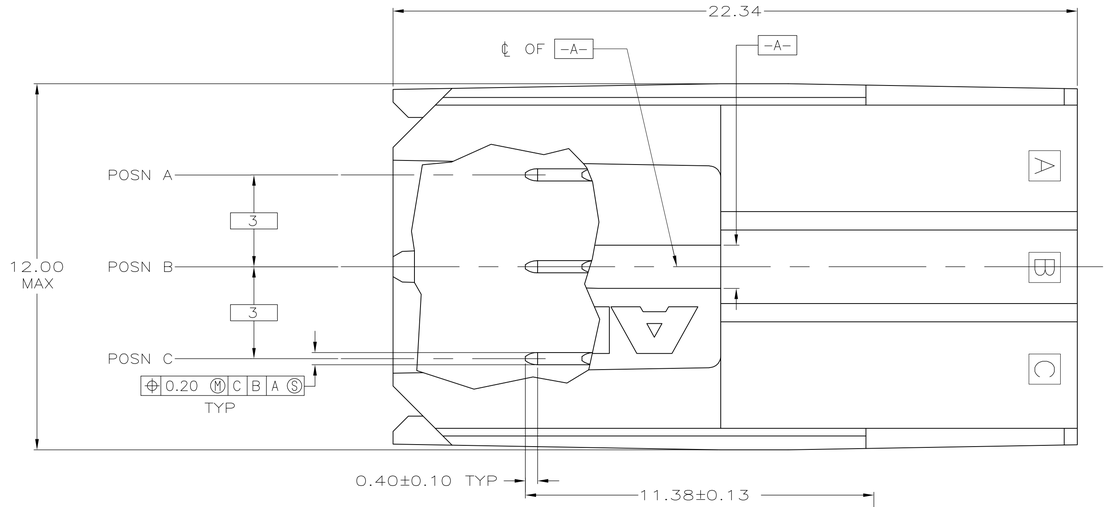

1. MATERIAL: HOUSING: POLYESTER. COLOR: GRAY. UL 94V-O
   CONTACT: PHOSPHOR BRONZE.
2. FINISH: CONTACT MATING AREA: 1.27μm MIN GOLD OR 0.08μm MIN GOLD OVER 0.76μm MIN PALLADIUM-NICKEL.
   ACTION PIN AREA: 0.5μm MIN TIN LEAD PLATE,
   ALL OVER 1.27μm MIN NICKEL UNDERPLATE.
3. FINISH: CONTACT LUBRICATION WITH BELLCORE APPROVED LUBRICANT. TECHNICAL REFERENCE: TR-NWT-001217 ISSUE 1, SEPT 1992.
4. MATERIAL: HOUSING: POLYESTER. COLOR: GRAY. UL 94V-O.
   CONTACT: HIGH CURRENT COPPER ALLOY.
5. REFERENCE APPLICATION SPEC 114-1103 FOR RECOMMENDED PLATED THRU HOLE DIAMETER AND PLATING THICKNESSES.
6. CURRENT RATING 10A/CONTACT FOR PHOS BRONZE CONTACTS AND 16A/CONTACT FOR HIGH CURRENT COPPER ALLOY CONTACTS PER PRODUCT SPEC 108-1651.
7. OBSOLETE PARTS: OBSOLETE CIS STREAMLINING PER D.RENAUD/D.SINISI

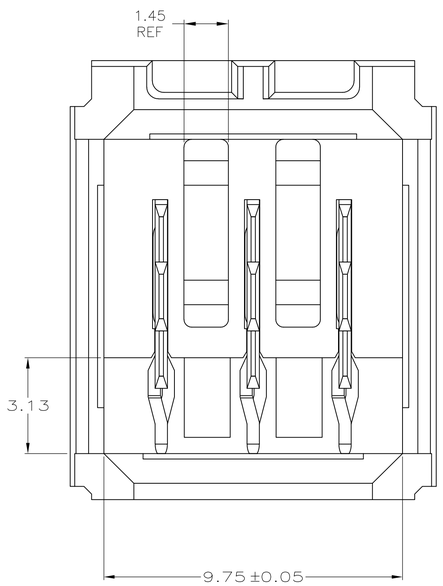

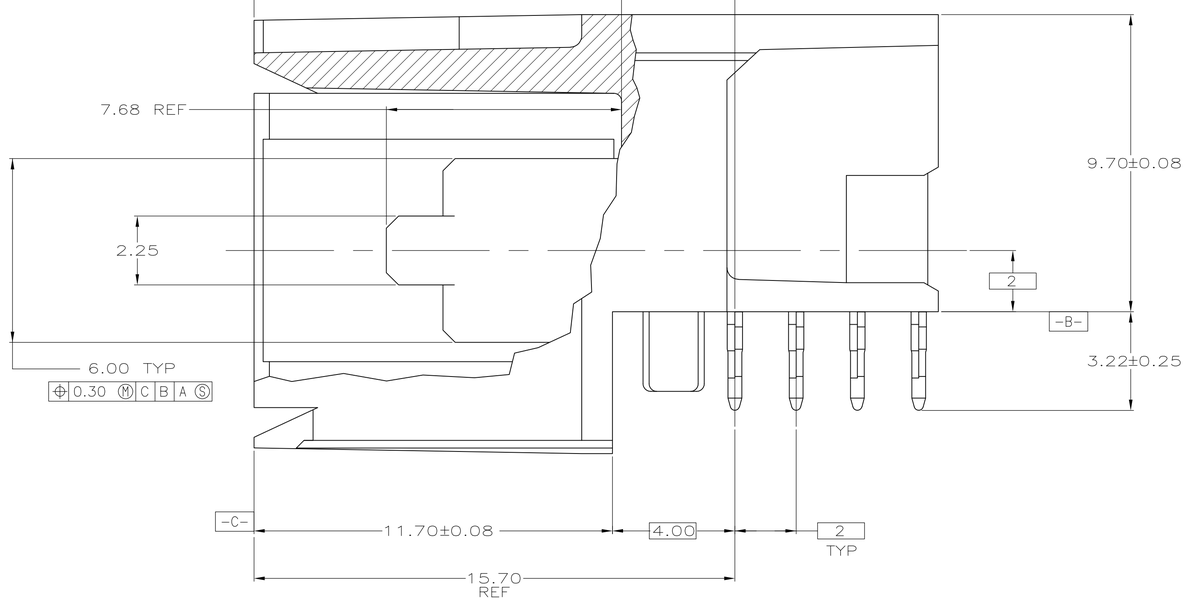

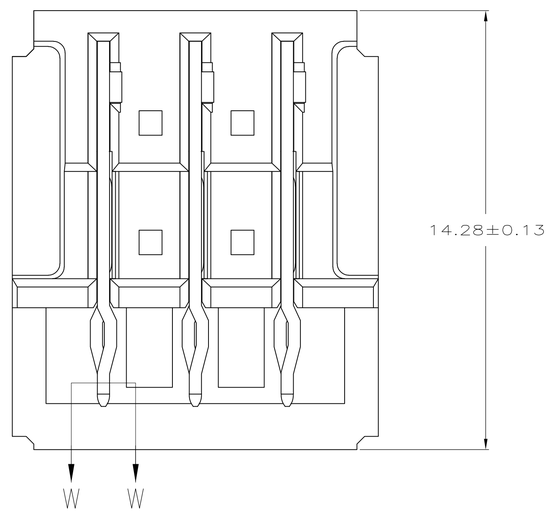

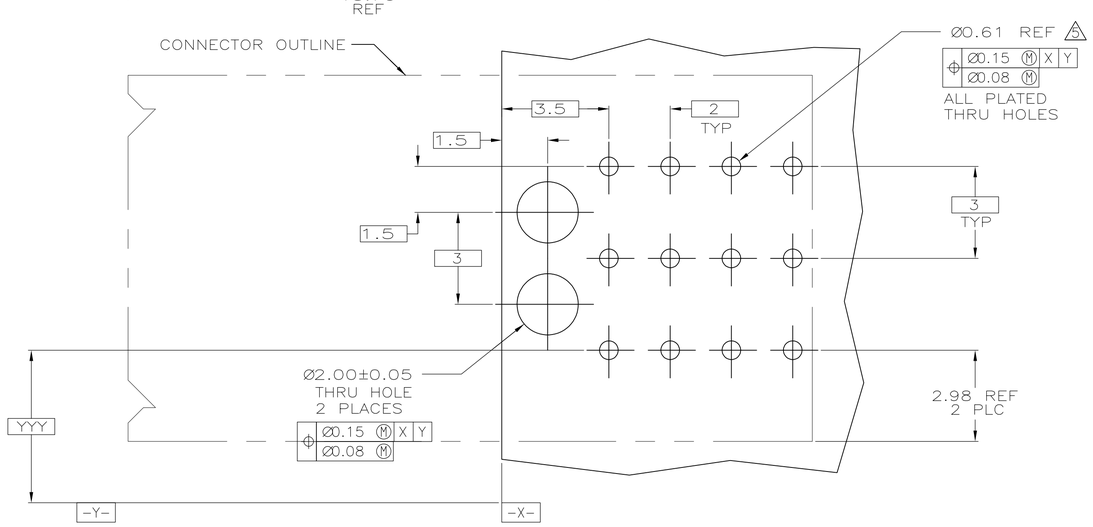

RECOMMENDED PCB HOLE LAYOUT

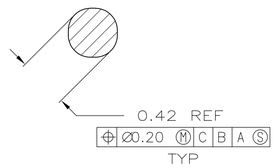

SECTION W-W
SCALE 40:1

7 OBSOLETE	2 3 4	~~5-223974-1~~
	1 2 3	223974-1
	MATERIAL & FINISH	PART NUMBER

THIS DRAWING IS A CONTROLLED DOCUMENT.

DIMENSIONS: mm

TOLERANCES, UNLESS OTHERWISE SPECIFIED:
0 PLC ± -
1 PLC ± -
2 PLC ± 0.13
3 PLC ± -
4 PLC ± -
ANGLES ± -

MATERIAL: SEE TABLE
FINISH: SEE TABLE

DWN T. SHUEY 5-28-98
CHK R. PATTERSON 6-1-98
APVD R. PATTERSON 6-1-98
PRODUCT SPEC -
APPLICATION SPEC -
WEIGHT -

Tyco Electronics
Tyco Electronics Corporation
Harrisburg, PA 17105-3608

NAME: ASSEMBLY, RIGHT ANGLE HEADER, W/ RETENTION PEGS, UNIVERSAL POWER MODULE

SIZE	CAGE CODE	DRAWING NO	RESTRICTED TO
A1	00779	C-223974	-

CUSTOMER DRAWING | SCALE 10:1 | SHEET 1 OF 1 | REV F

4805 (1/08)