THIS DRAWING IS UNPUBLISHED. RELEASED FOR PUBLICATION 20
© COPYRIGHT 20 BY TYCO ELECTRONICS CORPORATION. ALL RIGHTS RESERVED.

LOC	DIST
ES	00

REVISIONS

P	LTR	DESCRIPTION	DATE	DWN	APVD
	A2	CORRECT DRAFT ERROR	09APR2013	OL	SZ

1. MATERIAL: HOUSING: POLYESTER. COLOR: BLACK, UL 94 V-0
   CONTACT: COPPER ALLOY.

2. FINISH: CONTACT MATING AREA: 0.00076 mm MIN GOLD PLATE OVER 0.00127 mm MIN NICKEL, OR 0.0005 mm MIN GOLD OVER 0.00064 mm PALLADIUM-NICKEL OVER 0.00127 mm MIN NICKEL.
   COMPLIANT TAIL AREA: 0.0005 mm MIN MATTE TIN PLATE OVER 0.00127 mm NICKEL UNDERPLATE.

3. TAILS OF MATING UPM STYLE RECEPTACLE ARE OFFSET BY 0.75 mm FROM TAILS OF THIS CONNECTOR. SEE CUSTOMER DRAWING 120992 FOR RECEPTACLE EXAMPLE. SEE APPLICATION SPEC 114-1103 FOR MORE DETAILED DESCRIPTION OF THE TAIL OFFSETS.

4. PC BOARD HOLE SPECIFICATIONS:
   DRILLED HOLE SIZE: 0.700±0.02 mm
   FINISHED HOLE SIZE: 0.60±0.05 mm
   PLATING THICKNESS:
   0.025 - 0.050 mm COPPER
   0.004 - 0.010 mm HASL TIN
   0.0005 mm MIN IMMERSION TIN
   0.0002 - 0.0005 mm OSP
   0.0001mm MIN IMMERSION SILVER
   0.0001-0.0005 mm IMMERSION GOLD OVER 0.004-0.005 mm NICKEL

5. DATUM AND BASIC DIMENSION ESTABLISHED BY CUSTOMER.

6. MINIMUM REQUIRED PC BOARD THICKNESS IS 1.44mm.

7. CONTACT AREA LUBRICATED WITH BELLCORE APPROVED LUBRICANT. TECHNICAL REFERENCE GR-1217-CORE, ISSUE 1 NOVEMBER 1995.

8. POSITION A1 IS AT MATERIAL ID.

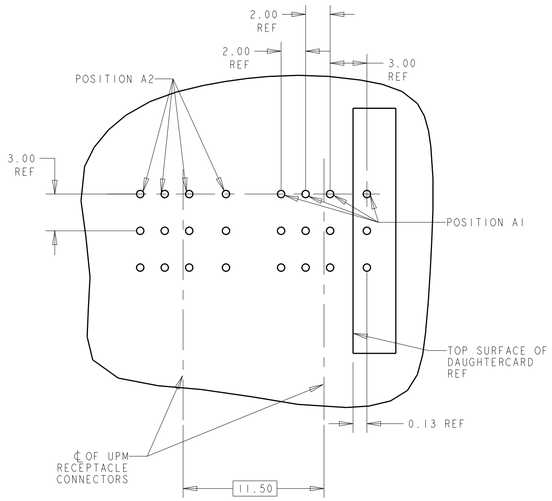

MATING VERTICAL UPM RECEPTACLE PCB LAYOUT 3

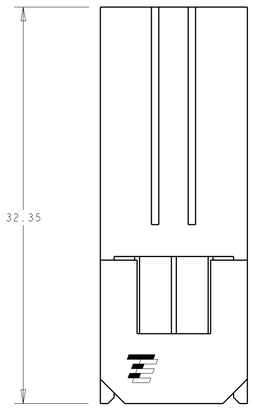

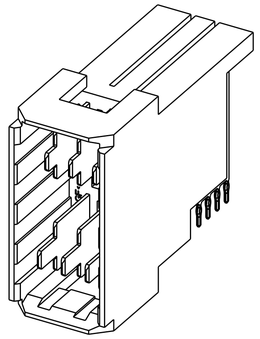

1892711-2
SCALE 3:1

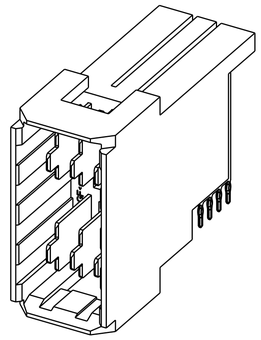

1892711-1
SCALE 3:1

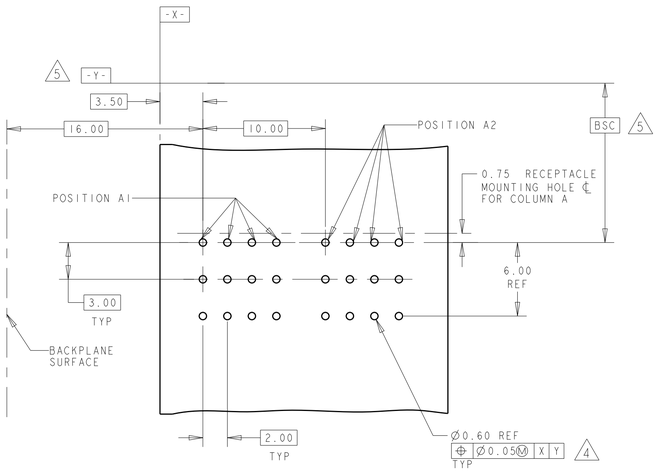

RECOMMENDED PCB LAYOUT 6

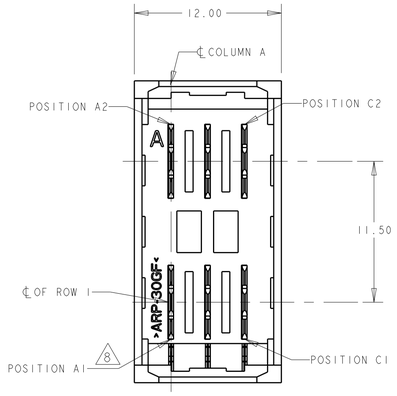

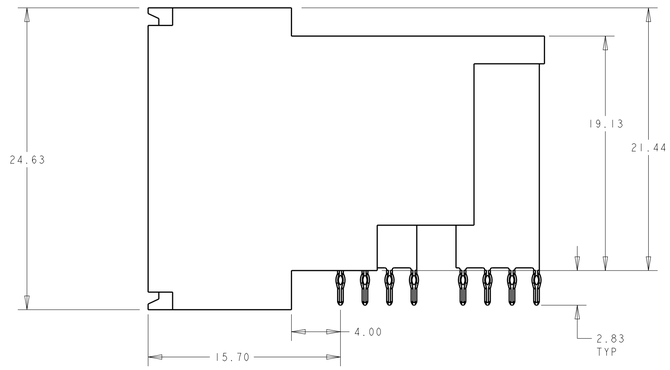

B1	C1	A1,A2,B2,C2	1892711-3
-	A1,B1,C1	A2,B2,C2	1892711-2
-	-	ALL	1892711-1
POSITION LOADED WITH 7.7 REF SHORT PIN	POSITION LOADED WITH 10.92 REF LONG PIN	POSITION LOADED WITH 9.32 REF MIDDLE PIN	PART NO

THIS DRAWING IS A CONTROLLED DOCUMENT FOR TYCO ELECTRONICS CORPORATION. IT IS SUBJECT TO CHANGE. CONTACT TYCO ELECTRONICS CORPORATION ORGANIZATION SHOULD BE CONTACTED FOR THE LATEST REVISION.

DWN	ORANDO LI	23JUN2009
CHK	SUNY ZHAO	23JUN2009
APVD	STEVEN YAO	23JUN2009

Tyco Electronics
Tyco Electronics
ShangHai,P.R.China.200233

DIMENSIONS: mm

TOLERANCES UNLESS OTHERWISE SPECIFIED:
0 PLC ±-
1 PLC ±.25
2 PLC ±.25
3 PLC ±-
4 PLC ±-
ANGLES ±1°0'

MATERIAL 1
FINISH 2

PRODUCT SPEC: 108-2289
APPLICATION SPEC: -
WEIGHT: -

NAME: ASSEMBLY, RIGHT ANGLE HEADER, MINIPAK HDE, 2X3 POSITION

SIZE	CAGE CODE	DRAWING NO	RESTRICTED TO
A1	00779	C-1892711	-

Customer Drawing | SCALE 5:1 | SHEET 1 OF 1 | REV A2