THIS DRAWING IS UNPUBLISHED. RELEASED FOR PUBLICATION -,- .
© COPYRIGHT - BY TYCO ELECTRONICS CORPORATION. ALL RIGHTS RESERVED.

LOC	DIST
ES	00

REVISIONS

P	LTR	DESCRIPTION	DATE	DWN	APVD
	B2	REVISED ECR-08-015695	19JUN08	C.Z	S.Y

PANEL CUT DIMENSIONS

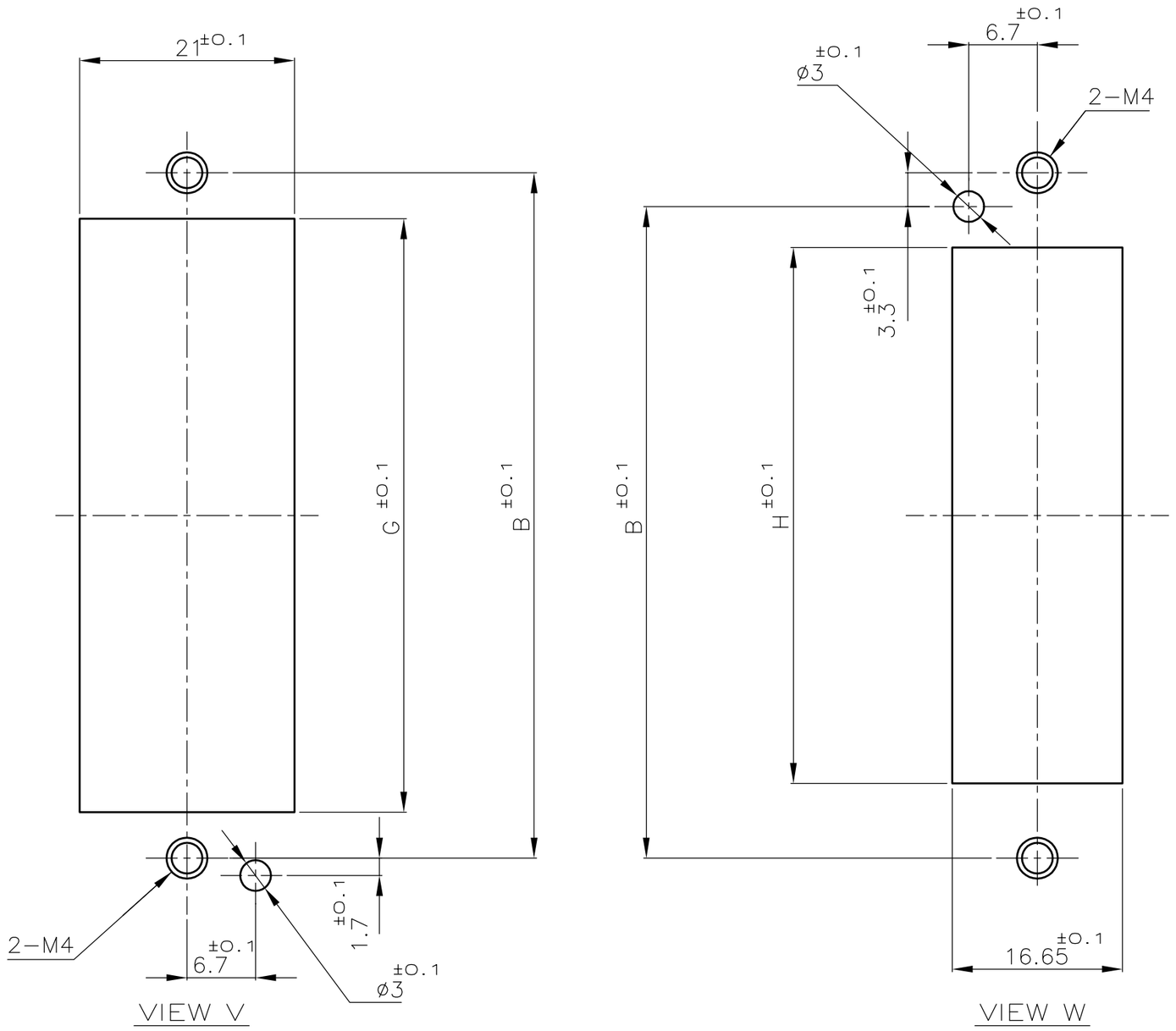

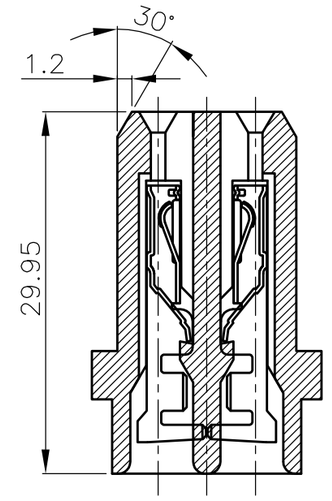

POWER SECTION
SECTION A-A

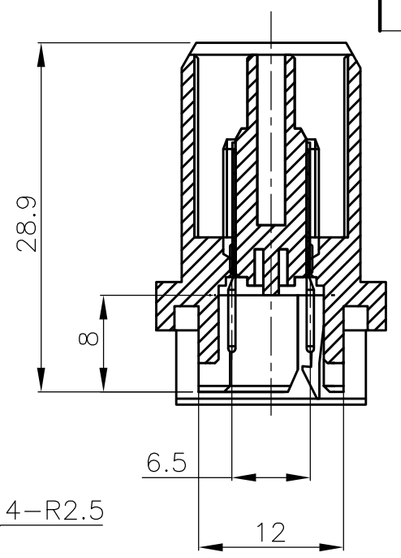

SIGNAL SECTION
SECTION B-B

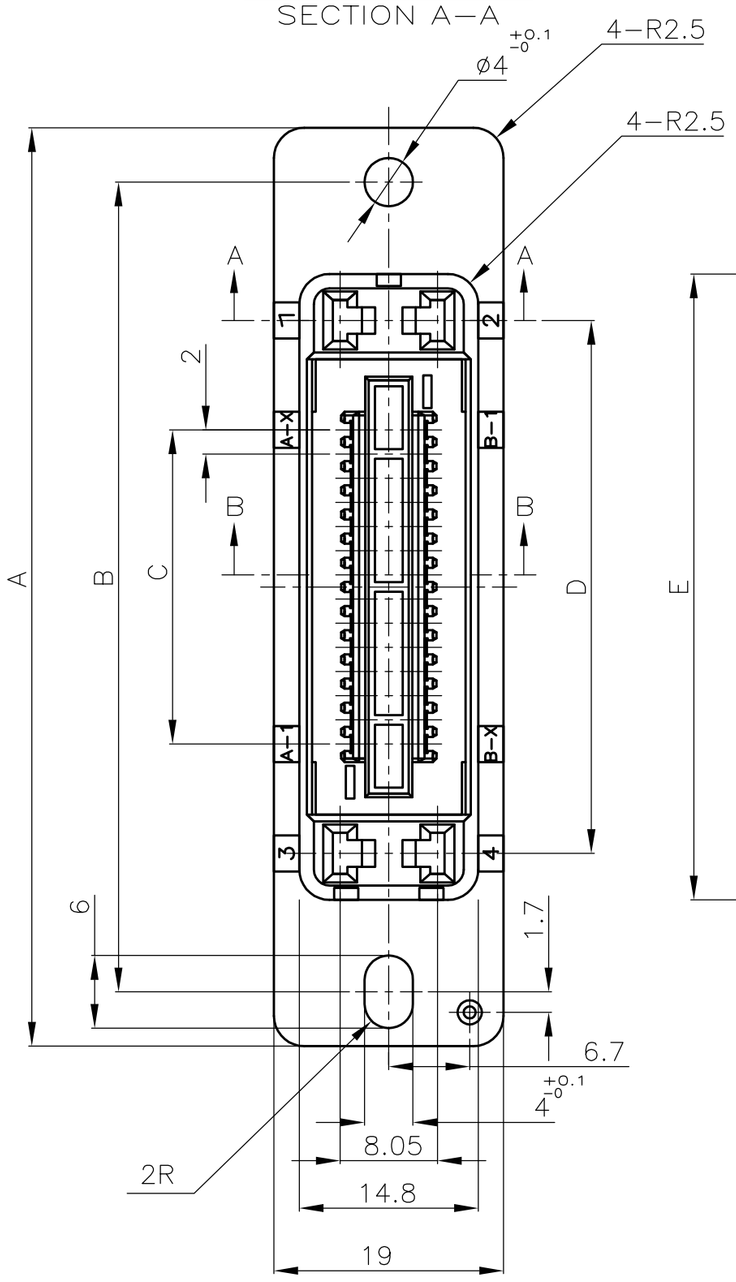

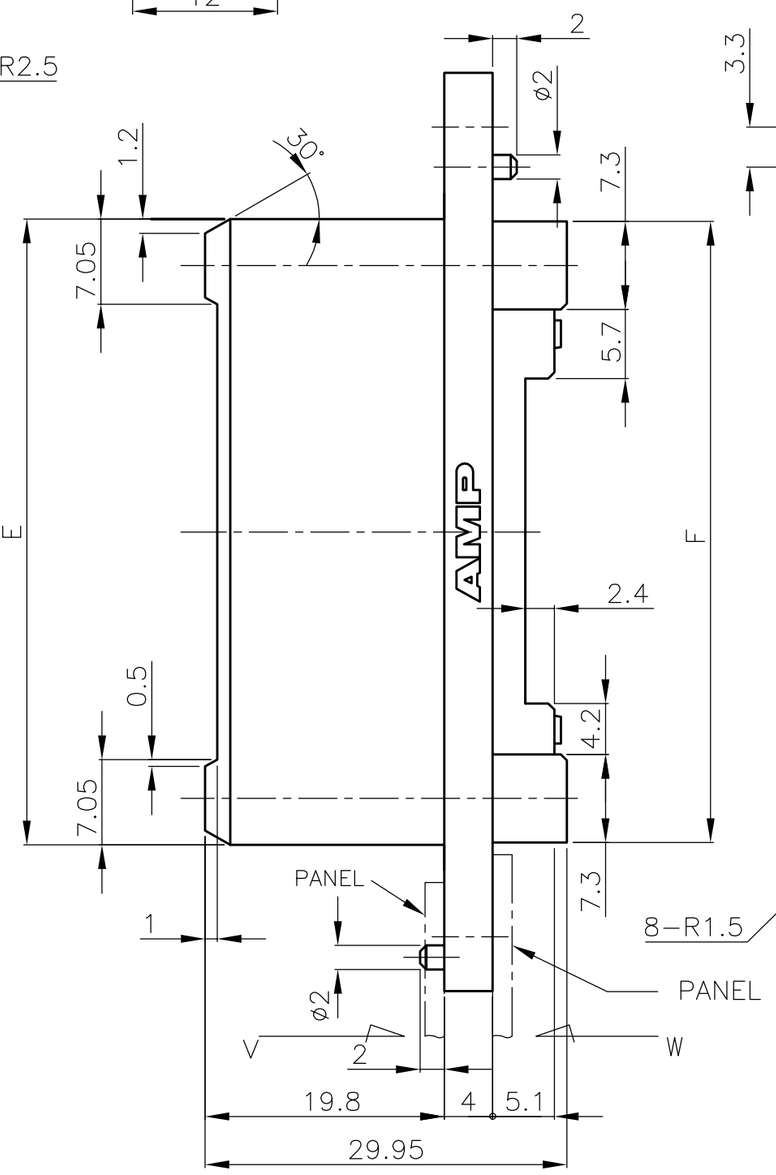

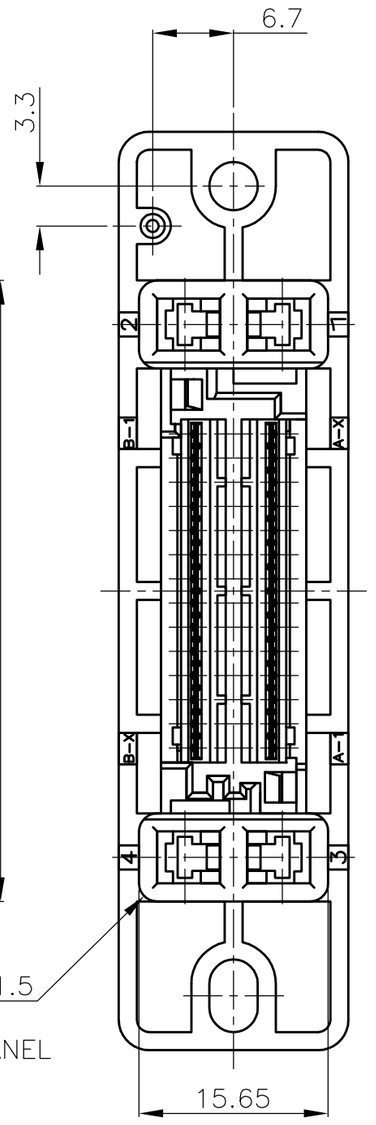

292185

NOTES
1. MATERIAL
   HOUSING:THERMO PLASTIC
   CONTACT:COPPER ALLOY
2. CONTACT FINISH
   MATING SIDE:NICKEL PL.ALL OVER GOLD PL.
   CT MATING SIDE:NICKEL PL.ALL OVER Sn-100% PL.
3. APPLIED POWER CONTACT P/N

FINISH	AWG	STRIP	LOOSE PIECE
GOLD PL.	#16~20	179316-4	
	#20~24	179317-4	
TIN PL.	#16~20	1-179316-2	
	#20~24	1-179317-2	

4 P:NUMBER OF POWER CONTACT (UNLOADED)
S:NUMBER OF SIGNAL CONTACT (PRELOADED)

APPLIED CT HOLDER P/N	APPLIED CTCONN P/N	MATING COUNTER P/N	H	G	F	E	D	C	B	A	POS 4 (P-S)	P/N
2- -8	1- -4	2-292181-8	52.4	58	51.4	51.8	44.1	26	67	76	4-28	2- -8
2- -0	1- -0	2-292181-0	44.4	50	43.4	43.8	36.1	18	59	68	4-20	2- -0
175133-8	173977-4	292182-8	32.4	38	31.4	31.8	24.1	6	47	56	4-8	292185-8

TOLERANCE UNLESS OTHERWISE SPECIFIED
10≥* :±0.2
30≥*>10 :±0.25
100≥*>30 :±0.3
ANGLE :±3°

THIS DRAWING IS A CONTROLLED DOCUMENT.

DIMENSIONS: MM

TOLERANCES UNLESS OTHERWISE SPECIFIED
0 PLC ± -
1 PLC ± -
2 PLC ± -
3 PLC ± -
4 PLC ± -
ANGLES ± -

MATERIAL: SEE NOTE
FINISH: SEE NOTE

DWN J.JIANG 05FEB03
CHK S.YAO 05FEB03
APVD T.SASAKI 05FEB03
PRODUCT SPEC 108-60022
APPLICATION SPEC
WEIGHT

Tyco Electronics
Tyco Electronics Corporation
Shanghai, P.R.China,200233

NAME: HYBRID MINI DRAWER CONN. REC ASS'Y

SIZE	CAGE CODE	DRAWING NO	RESTRICTED TO
A2	00779	C-292185	-

CUSTOMER DRAWING | SCALE NTS | SHEET 1 OF 1 | REV B2