THIS DRAWING IS UNPUBLISHED. RELEASED FOR PUBLICATION 20
© COPYRIGHT 20 BY TYCO ELECTRONICS CORPORATION. ALL RIGHTS RESERVED.

LOC	DIST
GP	00

REVISIONS

P	LTR	DESCRIPTION	DATE	DWN	APVD
	B	REVISED PER ECO-10-012356	14DEC2010	CJV	EJB
	-	-	-	-	-
	-	-	-	-	-

1. HOUSINGS; POLYESTER, UL 94V-0 RATED, NATURAL
   SIGNAL AND SIGNAL GROUND CONTACTS: COPPER ALLOY
   UTILITY CONTACTS: PHOSPHOR BRONZE
2. UTILITY CONTACTS: 0.76µm MIN GOLD IN CONTACT AREA,
   2.54µm MIN TIN-LEAD ON PCB TAILS, OVER 1.27µm MIN NICKEL OVER ALL.
   SIGNAL AND SIGNAL GROUND CONTACTS: 0.76µm MIN GOLD IN CONTACT AREA,
   2.54µm MIN TIN-LEAD ON PCB TAILS, OVER 1.27µm MIN NICKEL OVER ALL.
3. ROWS A, C, D, AND F ARE SIGNAL CONTACTS. ROWS B AND E ARE SIGNAL GROUND CONTACTS.
4. DIMENSIONS PER CUSTOMER BOARD LAYOUT.
5. SEE UTILITY CONTACT SEQUENCE TABLE FOR LOCATION AND LEVEL/LENGTH OF UTILITY CONTACTS FOR EACH PRODUCT PART NUMBER. UTILITY LEVEL 1 CAN BE USED FOR SENSING. UTILITY LEVELS 2, 3, AND 4 CAN BE USED FOR POWER, GROUND, OR ESD. SEQUENCING SHOWN IN SECTION E-E SHOWS THREE LEVELS FOR COMPARISON. UTILITY LEVEL 2 EQUALS THE SIGNAL GROUND CONTACT LEVEL. SIGNAL LEVEL IS BETWEEN UTILITY LEVELS 1 AND 2.
6. BLOCK DIAGRAM AND CONTACT IDENTIFICATION APPLY TO COPLANAR NON-INVERTED APPLICATION ONLY. CONTACT IDENTIFICATION REVERSES FOR INVERTED APPLICATIONS, I.E COPLANAR OR MID-BOARD INVERTED.
7. COMPANY LOGO IN APPROXIMATE AREA SHOWN.

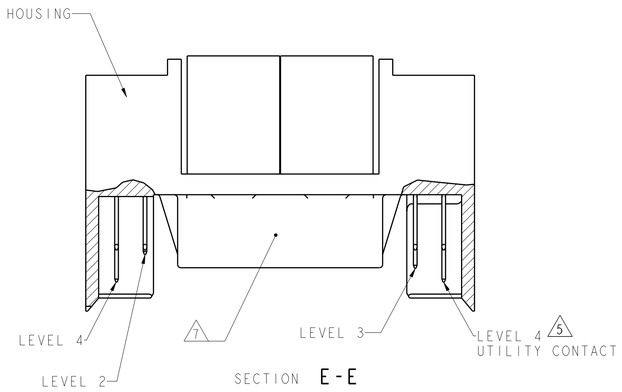

SECTION E-E

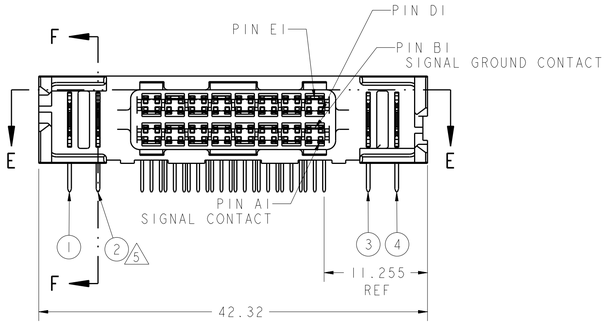

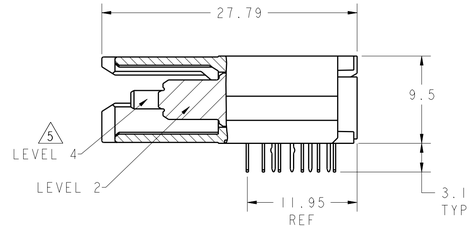

SECTION F-F

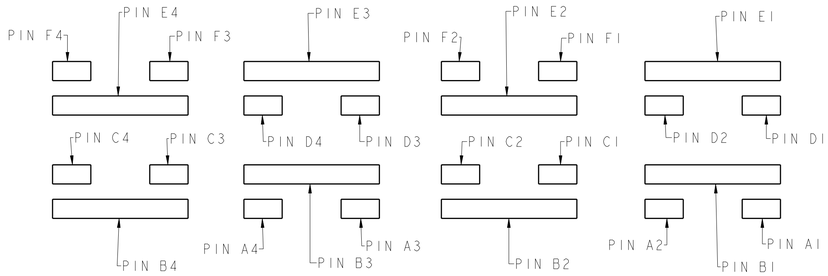

BLOCK DIAGRAM
MATING FACE CONFIGURATION

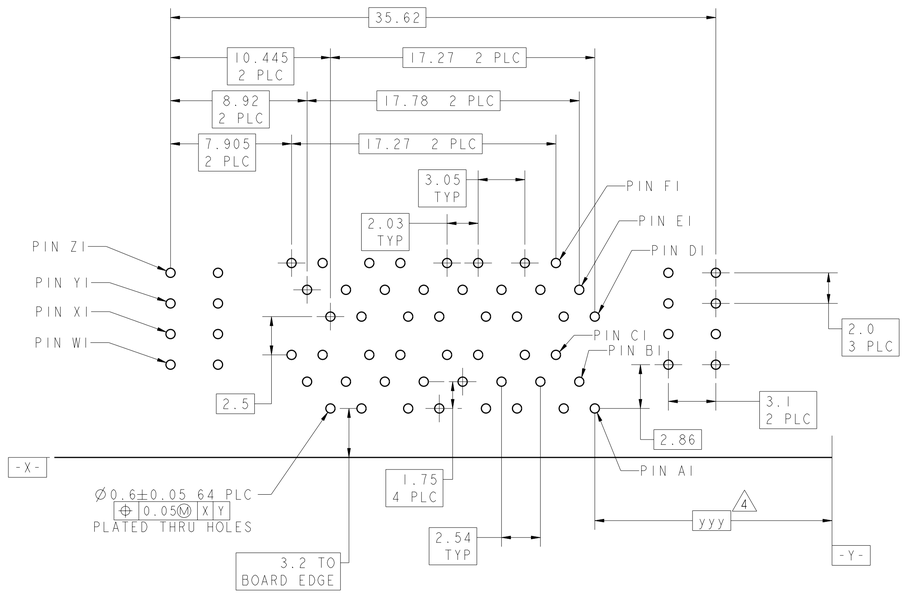

RECOMMENDED PC BOARD FOOTPRINT
COMPONENT SIDE SHOWN
SCALE 5:1

5 UTILITY CONTACT SEQUENCE TABLE
UTILITY CONTACT LEVEL 1, 2, 3, OR 4

1	2	3	4	PART NUMBER
4	3	3	4	6367582-1

UTILITY CONTACT LOCATION

THIS DRAWING IS A CONTROLLED DOCUMENT FOR TYCO ELECTRONICS CORPORATION. IT IS SUBJECT TO CHANGE AND THE CONTROLLING ENGINEERING ORGANIZATION SHOULD BE CONTACTED FOR THE LATEST REVISION.

DIMENSIONS: mm

TOLERANCES UNLESS OTHERWISE SPECIFIED:
0 PLC ±-
1 PLC ±0.3
2 PLC ±0.25
3 PLC ±-
4 PLC ±-
ANGLES ±-

MATERIAL 1
FINISH 2

DWN	C. VALENTINE	14DEC2010
CHK	E. BRIANT	14DEC2010
APVD	E. BRIANT	14DEC2010
PRODUCT SPEC	108-1985	
APPLICATION SPEC	114-13068	
WEIGHT	-	

Tyco Electronics
Tyco Electronics
Harrisburg, PA 17105-3608

NAME: Z-DOK+ ADAPTER BOARD CONNECTOR ASSEMBLY, 16 SIGNAL DIFF. PAIR, 2 UTILITY CONTACTS PER SIDE

SIZE	CAGE CODE	DRAWING NO	RESTRICTED TO
A1	00779	C-6367582	-

CUSTOMER DRAWING | SCALE 3:1 | SHEET 1 OF 1 | REV B