© – TE Connectivity. All Rights Reserved.

REVISIONS					
P	LTR	DESCRIPTION	DATE	DWN	APVD
	E4	REV AS PER ECR-23-169592	17MAR2023	DP	HW

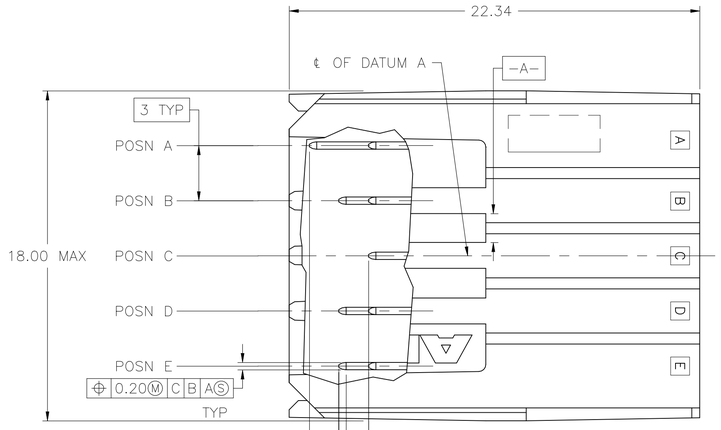

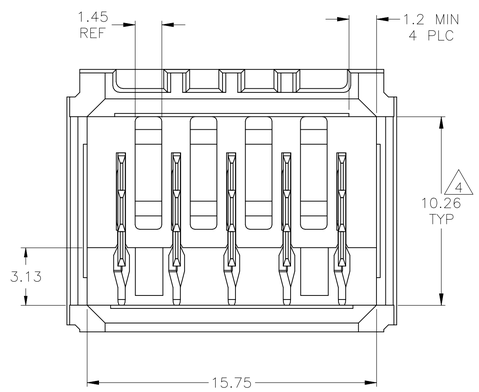

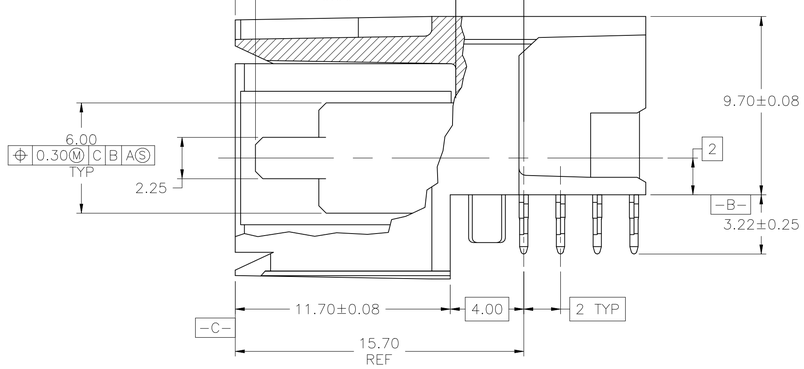

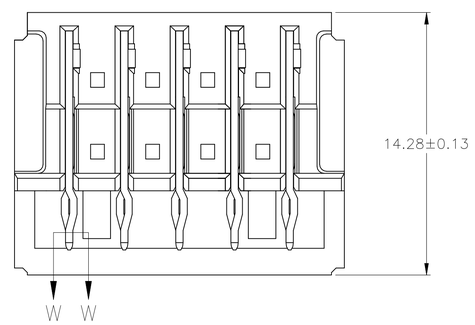

1. MATERIAL: HOUSING: POLYESTER. COLOR: GRAY. UL 94V–O.
   CONTACT: COPPER ALLOY.
2. FINISH: IN ACCORDANCE WITH PRODUCT SPECIFICATION 108–1651, GOLD PLATING OR EQUIVALENT PLATING ON PRODUCT CONTACT MATING AREA, AND MATTE TIN PLATING ON COMPLIANT PIN AREA, ALL OVER MATTE NICKEL UNDERPLATED. DETAIL PLEASE REFER TO PRODUCT SPECIFICATION 108–1651.
3. FINISH: CONTACT LUBRICATION WITH BELLCORE APPROVED LUBRICANT. TECHNICAL REFERENCE: GR–1217–CORE, ISSUE 1, NOVEMBER 1995.
4. 10.26±0.13 DIMENSION APPLIES IN THIS AREA.
5. REFERENCE APPLICATION SPEC 114–1103 FOR RECOMMENDED PLATED THRU HOLE DIAMETER AND PLATING THICKNESS.
6. CURRENT RATING 10A/CONTACT PER PRODUCT SPEC 108–1651.

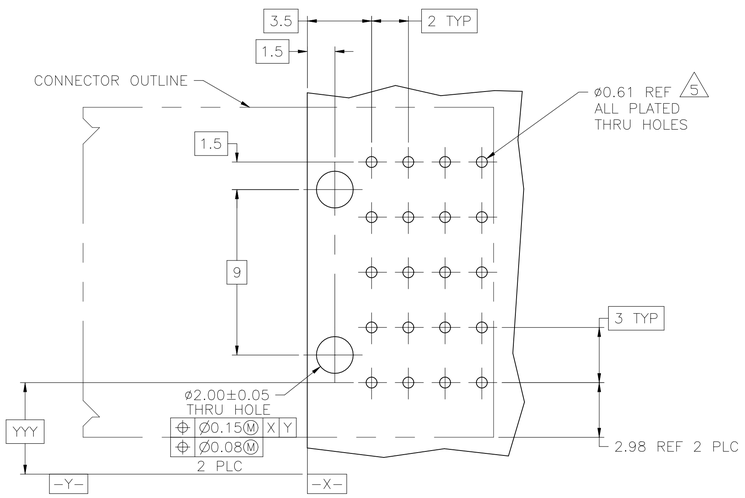

RECOMMENDED PCB HOLE LAYOUT

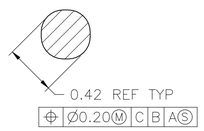

SECTION W–W
SCALE 40:1

POSITIONS LOADED WITH 10.90 REF CONTACTS	POSITIONS LOADED WITH 9.30 REF CONTACTS	POSITIONS LOADED WITH 7.68 REF CONTACTS	NO OF LOADED POSITIONS	PART NUMBER
C	A,B,D,E	–	5	5646955–8
A,B,D	C,E	–	5	5646955–6
A,B,D,E	–	C	5	5646955–5
A – C	D – E	–	5	5646955–4
A	B – E	–	5	5646955–3
E	A – D	–	5	5646955–2
A – E	–	–	5	5646955–1

THIS DRAWING IS A CONTROLLED DOCUMENT.

DIMENSIONS: mm

TOLERANCES UNLESS OTHERWISE SPECIFIED:
0 PLC ± –
1 PLC ± –
2 PLC ± 0.13
3 PLC ± –
4 PLC ± –
ANGLES ± –

MATERIAL 1 | FINISH 2

DWN B.CARBO 14DEC04
CHK R.PATTERSON 14DEC04
APVD R.PATTERSON 14DEC04
PRODUCT SPEC 108–1651
APPLICATION SPEC 114–1103
WEIGHT 0.000000

TE Connectivity

NAME: ASSEMBLY, RIGHT ANGLE HEADER, W/ RETENTION PEGS, UNIVERSAL POWER MODULE

SIZE A1 | CAGE CODE 00779 | DRAWING NO C–5646955 | RESTRICTED TO –

CUSTOMER DRAWING | SCALE 6:1 | SHEET 1 OF 1 | REV E4

4805 (1/15)