THIS DRAWING IS UNPUBLISHED. RELEASED FOR PUBLICATION -,- .
© COPYRIGHT - BY TYCO ELECTRONICS CORPORATION. ALL RIGHTS RESERVED.

LOC	DIST
AD	00

REVISIONS

P	LTR	DESCRIPTION	DATE	DWN	APVD
	O	RELEASED PER EC OS12-0317-04	22NOV04	BM	RW
	O1	REVISED PER ECO-09-024606	29OCT09	KK	AEG

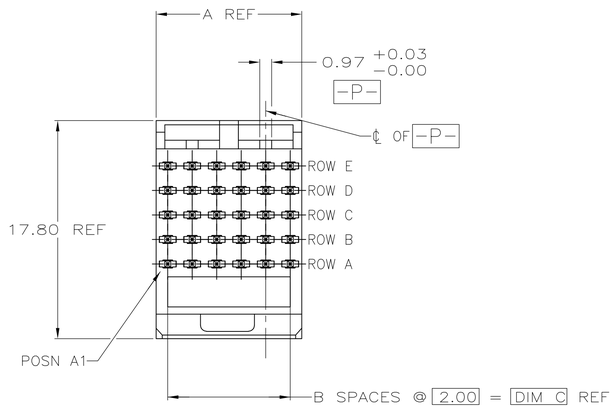

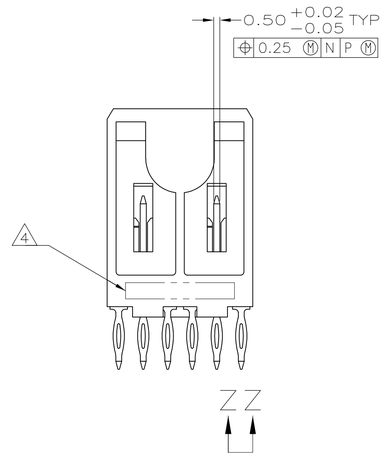

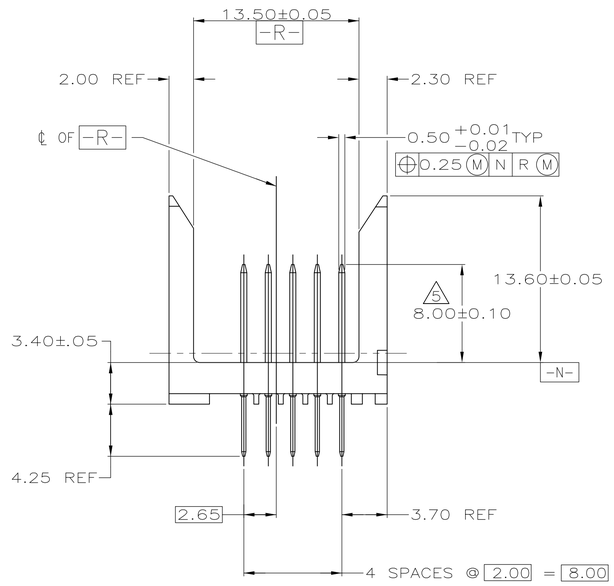

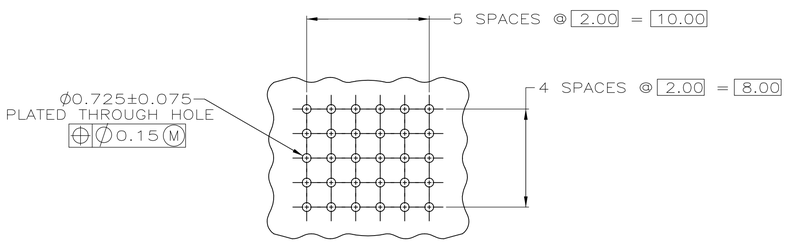

RECOMMENDED CIRCUIT PATTERN
(COMPONENT SIDE)

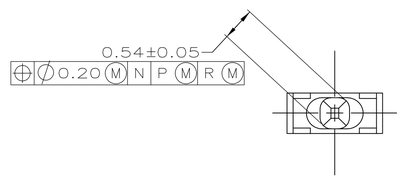

VIEW Z—Z
SCALE 20:1

1. HOUSING MATERIAL: LIQUID CRYSTAL POLYMER. COLOR: NATURAL.
2. CONTACT MATERIAL: PHOSPHOR BRONZE.
3. CONTACT FINISH:(B)
   UNDERPLATE (ENTIRE CONTACT):
   0.00127 MIN NICKEL PER SAE-AMS-QQ-N-290
   ON MATING SURFACES:
   CONFORMS TO ALL TESTING SPECIFIED FOR TELCORDIA UNCONTROLLED ENVIRONMENT.
   ON LEADS:
   0.0006 MIN MATTE TIN PER ASTM B 545 OVER UNDERPLATE.
   LUBRICATION (MIN MATING SURFACES):
   SURFACE CONDITIONER AFTER PLATING.
4. PART MARKING LOCATED APPROXIMATELY AS SHOWN.
5. DIMENSION APPLIES WHEN SEATED ON PRINTED CIRCUIT BOARD.
6. OBSOLETE PARTS: OBSOLETE CIS STREAMLINING PER D.RENAUD/D.SINISI

	C	B	A	NO OF SIGNAL POSN	PART NUMBER
6 OBSOLETE	94	47	95.88	240	~~223018-8~~
	46	23	47.88	120	~~223018-4~~
	22	11	23.88	60	~~223018-2~~
	10	5	11.88	30	223018-1

THIS DRAWING IS A CONTROLLED DOCUMENT.

DIMENSIONS: mm

TOLERANCES UNLESS OTHERWISE SPECIFIED:
0 PLC ± –
1 PLC ± –
2 PLC ± 0.13
3 PLC ± –
4 PLC ± –
ANGLES ± –

MATERIAL 1 2
FINISH 3

DWN B.MCMASTER 22NOV04
CHK R.WERTZ 22NOV04
APVD R.WERTZ 22NOV04
PRODUCT SPEC —
APPLICATION SPEC —
WEIGHT —

Tyco Electronics
Tyco Electronics Corporation
Harrisburg, Pa 17105-3608

NAME: PIN ASSEMBLY,Z-PACK 2mm FB, SIGNAL,VERTICAL,5 ROW,30 POSITION, WITH PRESS FIT LEADS

SIZE	CAGE CODE	DRAWING NO	RESTRICTED TO
A1	00779	C-5223018	—

CUSTOMER DRAWING | SCALE 4:1 | SHEET 1 OF 1 | REV O1