© – TE Connectivity. All Rights Reserved.

REVISIONS					
P	LTR	DESCRIPTION	DATE	DWN	APVD
	F2	ADDED NEW DASH NUMBER –7	08DEC2022	DP	SH

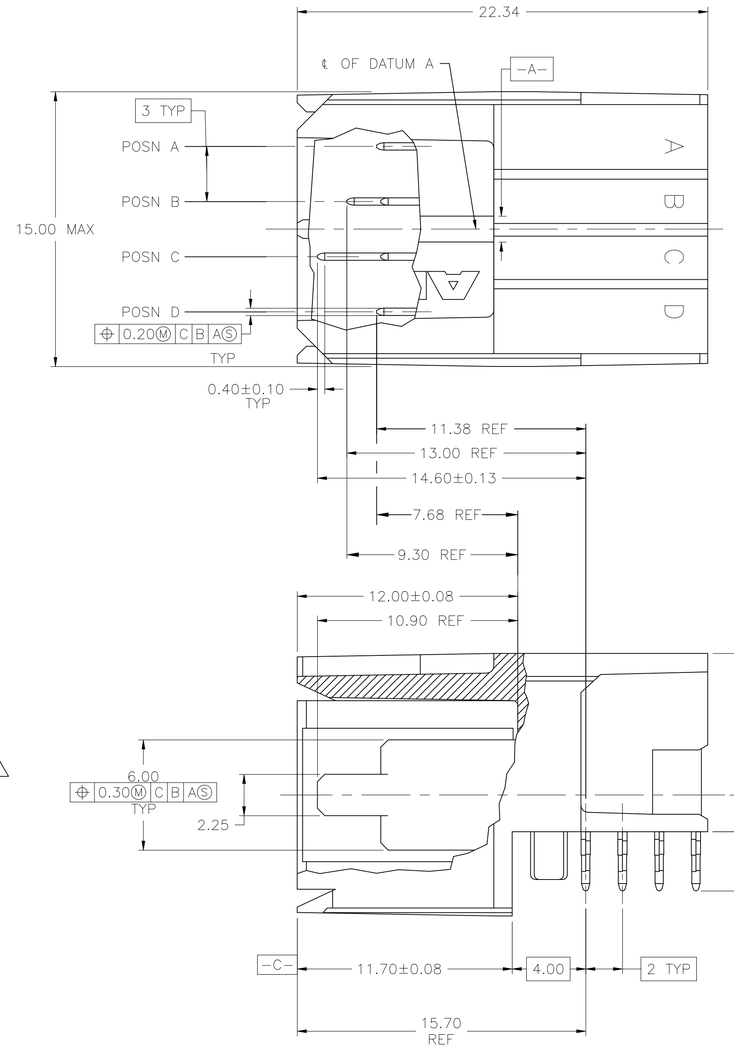

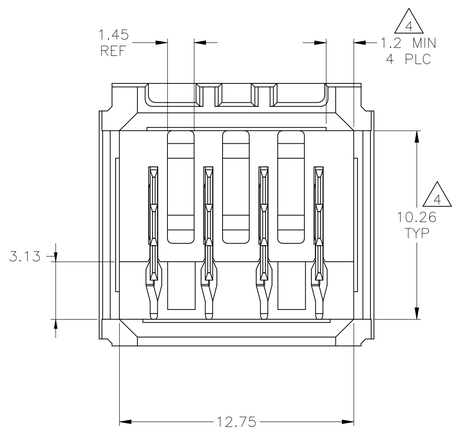

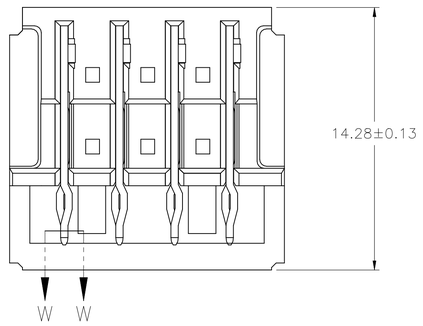

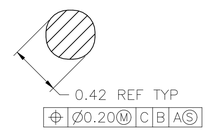

SECTION W–W

SCALE 10:1

1. MATERIAL: HOUSING: POLYESTER, GRAY. UL 94V–O.
   CONTACT: HIGH CURRENT COPPER ALLOY.
2. FINISH: IN ACCORDANCE WITH PRODUCT SPECIFICATION 108–1651, GOLD PLATING OR EQUIVALENT PLATING ON PRODUCT CONTACT MATING AREA, AND MATTE TIN PLATING ON COMPLIANT PIN AREA, ALL OVER MATTE NICKEL UNDERPLATED. DETAIL PLEASE REFER TO PRODUCT SPECIFICATION 108–1651.
3. FINISH: CONTACT LUBRICATION WITH BELLCORE APPROVED LUBRICANT. TECHNICAL REFERENCE: TR–NWT–001217 ISSUE 1, SEPT 1992.
4. THE 10.26±0.13 DIMENSION APPLIES IN THIS AREA.
5. REFERENCE APPLICATION SPEC 114–1103 FOR RECOMMENDED PLATED THRU HOLE DIAMETER AND PLATING THICKNESSES.
6. CURRENT RATING 16A/CONTACT PER PRODUCT SPEC 108–1651.
7. MATERIAL: HOUSING: POLYESTER, BLACK. UL 94V–O.
   CONTACT: HIGH CURRENT COPPER ALLOY.

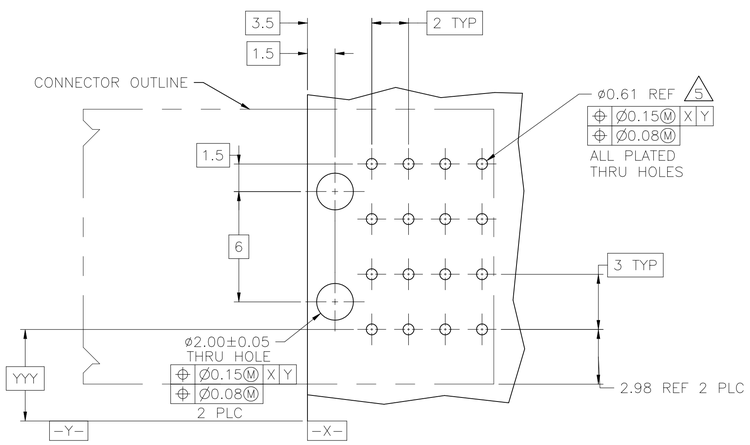

RECOMMENDED PCB HOLE LAYOUT

–	A,D	B,C	4	120954–7
–	C,D	A,B	4	120954–6
A,B	C,D	–	4	120954–5
A,D	–	B,C	4	120954–4
–	A,D	B,C	4	120954–3
A	B	C,D	4	120954–2
A.B.C.D	–	–	4	120954–1
POSITIONS LOADED WITH 10.90 REF CONTACTS	POSITIONS LOADED WITH 9.30 REF CONTACTS	POSITIONS LOADED WITH 7.68 REF CONTACTS	NO OF LOADED POSITIONS	PART NUMBER

THIS DRAWING IS A CONTROLLED DOCUMENT.

DIMENSIONS: mm

TOLERANCES UNLESS OTHERWISE SPECIFIED:
0 PLC ± –
1 PLC ± –
2 PLC ± 0.13
3 PLC ± –
4 PLC ± –
ANGLES ± –

MATERIAL 1 7
FINISH 2 3

DWN B.CARBO 08OCT04
CHK R.PATTERSON 08OCT04
APVD R.PATTERSON 08OCT04
PRODUCT SPEC 108–1651
APPLICATION SPEC 114–1103
WEIGHT 0.000000

TE Connectivity

NAME ASSEMBLY, RIGHT ANGLE HEADER HC W/ RETENTION PEGS, UNIVERSAL POWER MODULE

SIZE A1 | CAGE CODE 00779 | DRAWING NO C–120954 | RESTRICTED TO –

CUSTOMER DRAWING | SCALE 6:1 | SHEET 1 OF 1 | REV F2

4805 (1/15)