MI DRG. NO.	JLCXXEYYYTRVPCE	REV.
JLCXXEYYYTRVPC		E

VARIABLE INDUCTOR COIL VERTICAL MOUNT PC STYLE (NONMAGNETIC)

PATENT No. 8,248,198

FILE: AIROUT

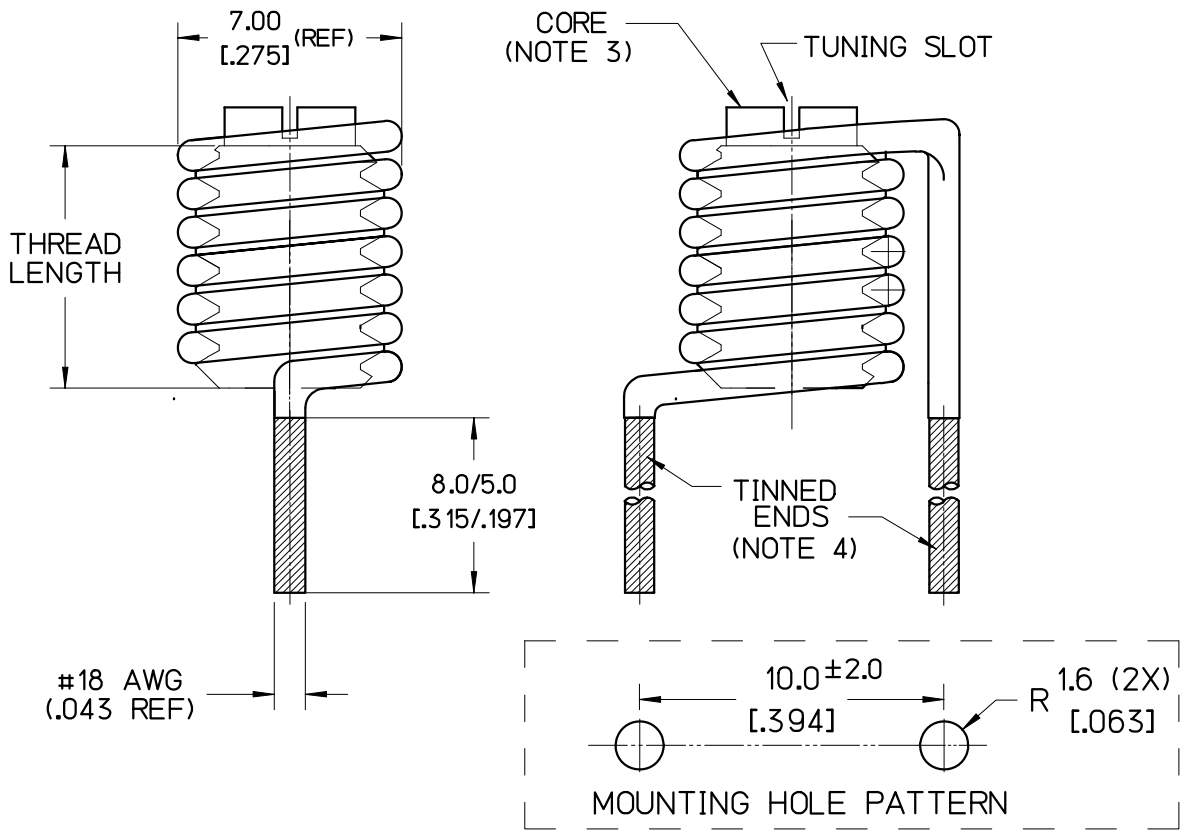

NOTES:

1. a. DIMENSIONS: mm
   b. DIMENSIONS: [inches] FOR REFERENCE
2. COIL :
   a. MATERIAL:
      COPPER ALLOY (COATED)
   b. COATING ABLE TO WITHSTAND
      275°C FOR 100 HOURS AS PER
      NEMA "CLASS 200". (REF: ASTM D2307)
3. CORE :
   a. MATERIAL: PTFE / COPPER ALLOY
   b. SELF-RESONANT FREQUENCY (SRF):
      MEASURED WITH THE CORE FULLY
      ENGAGED AS DEPICTED
   c. L MIN MEASURED:
      CORE FULLY ENGAGED INTO WINDINGS.
   d. L MAX MEASURED:
      CORE ENGAGED A SINGLE TURN.
4. TINNING :
   a. MATERIAL:
      RoHS COMPLIANT "SAC" ALLOY

JMC P/N	READINGS: AGILENT/8358-A METER						TURNS	THD LGTH mm (in)
	L (nH)				Q (@ 100 MHz)	SRF (GHz)		
	MIN	NOM	MAX	NO CORE				
JLC02E030TRVPC	32	33	34	39	90	1.2	2	6(.236)
JLC03E048TRVPC	46	49	52	59	95	1.0	3	6(.236)
JLC04E065TRVPC	60	64	68	78	101	0.9	4	6(.236)
JLC05E088TRVPC	74	81	87	99	114	0.9	5	8(.315)
JLC06E110TRVPC	94	107	119	123	119	0.7	6	8(.315)
JLC07E130TRVPC	104	118	133	142	121	0.7	7	10(.394)

LEVEL	DATE	DRN.	CHK.	APP.	ECN
E	01/10/14	SSH	MAI	MAI	001198
D	8/28/12	BFH	MAI	MAI	001102
C	8/7/12	RJV	–	–	001096

REVISIONS

DRN.	CHK.	APP.	SCALE
RJV	RJV	MAI	NONE
DATE 8/7/12	DATE 8/7/12	DATE 8/9/12	.XX ± .762 .XXX ± .254

JOHANSON MANUFACTURING CORPORATION
ROCKAWAY VALLEY ROAD, BOONTON, N.J. 07005 (973)334-2676 FAX (973)334-2954
ELECTRONIC ACCURACY THROUGH MECHANICAL PRECISION

PROPRIETARY INFORMATION CONTAINED NOT TO BE USED WITHOUT JOHANSON MANUFACTURING CORPORATION APPROVAL